NATIONAL AERONAUTICS AND SPACE ADMINISTRATION

1996 Mars Missions

Press Kit
November 1996

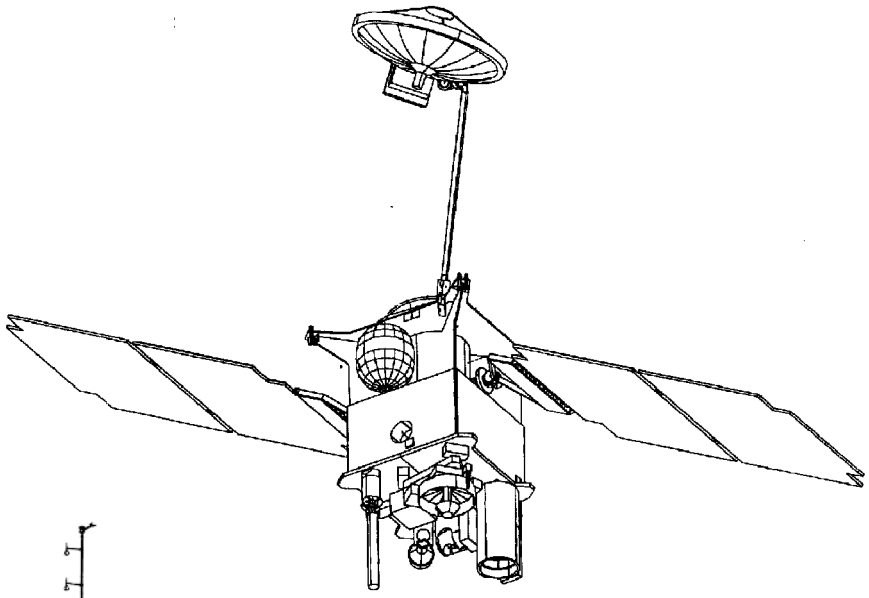

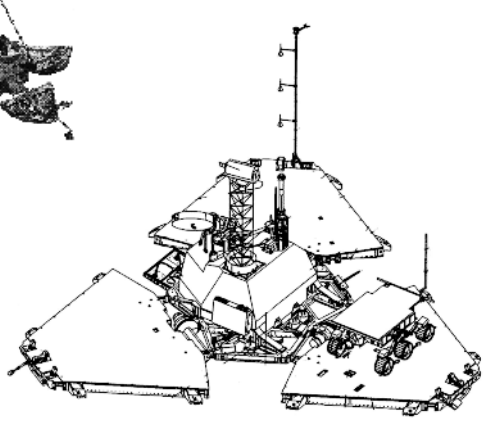

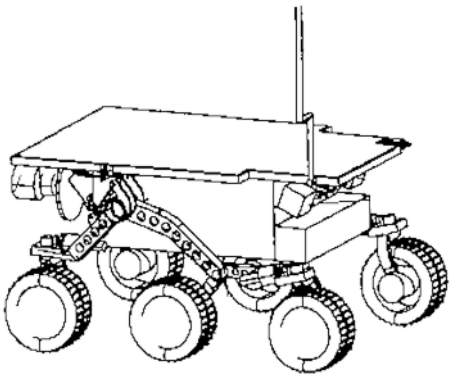

Contacts

Douglas Isbell Headquarters, Washington, DC	Policy/Program Management	202/358-1753
Franklin O'Donnell Jet Propulsion Laboratory, Pasadena, CA	Mars Global Surveyor and Mars Pathfinder Missions	818/354-5011
George Diller Kennedy Space Center, FL	Launch Operations	407/867-2468

Contents

General Release 3
Media Services Information 6
Quick Facts 7
Mars at a Glance 9
Historical Mars Missions 10
Why Mars? 11
The Multi-Year Mars Program 15
Mars Global Surveyor 18
- Mission Overview 19
- Spacecraft 26
- Science Objectives 27

Mars Pathfinder 30
- Mission Overview 30
- Spacecraft 40
- Science Objectives 43

Mars '96 48
- Mission Overview 48
- Spacecraft 54
- Science Objectives 54
- U.S. Contributions to Mars '96 56

Program/Project Management 59

RELEASE: 96-207

THREE MARS MISSIONS TO LAUNCH IN LATE 1996

The United States and Russia return to Mars this fall with the launch of three missions destined to explore Earth's planetary neighbor in greater detail than has ever before been accomplished.

NASA's Mars Global Surveyor and Mars Pathfinder and Russia's Mars '96 mission are scheduled for three separate launches in November and December 1996. Mars Global Surveyor, an orbiter carrying six scientific instruments to study the atmosphere, surface and interior of Mars, will be launched Nov. 6. It will be followed by Russia's Mars '96, an orbiter carrying 12 instruments plus two small landers and two penetrators, which will lift off Nov. 16. Mars Pathfinder will carry a lander and small rover robot when it is lofted into space Dec. 2.

Launch of the NASA spacecraft marks the beginning of a new era in Mars exploration and an ambitious new initiative by the United States to send pairs of spacecraft to the red planet every 26 months through the year 2005.

NASA's new decade-long program of robotic exploration — known as the Mars Surveyor program — takes the next step in expanding scientists' knowledge of Mars. The program is focused on three major areas of investigation: the search for evidence of past life on Mars; understanding the Martian climate and its lessons for the past and future of Earth's climate; and understanding the geology and resources that could be used to support future human missions to Mars.

The unifying theme of the Mars exploration program is the search for water, which is a key requirement for life, a driver of climate and a vital resource. Early missions will thus focus partially on finding and understanding the past and present state of water on Mars. Mars Global Surveyor and Mars Pathfinder will be the forerunners in this quest, becoming the precursors to a series of missions that may culminate in the first few years of the next century with robotic return of a Martian soil sample to Earth, followed by eventual human exploration.

Continuing Exploration Program

NASA's 1996 missions to Mars further the global explorations of the planet begun in 1965 with the Mariner 4 mission to Mars and continued in the mid-'70s by the Viking lander missions.

From earlier investigations, scientists have compiled a portrait of Mars full of stark contrasts. Mars' surface features range from ancient, cratered terrain like Earth's Moon to immense volcanoes that would dwarf Mt. Everest and a canyon that would stretch across the United States.

Mars' atmosphere is less than 1 percent as thick as Earth's, but there are permanent polar caps with reservoirs of water ice. Closeup shots of Mars' terrain resemble that of an Earthly desert, with surface features that look like river channels carved long ago by flowing water.

The next step in Mars exploration, according to scientists, is to obtain an overview of the entire planet and to verify remote observations with measurements taken from the ground. Mars Global Surveyor is designed to study the atmosphere, surface and interior systematically over a full Martian year. The Russian Mars '96 orbiter has similar objectives, but will also characterize the uppermost atmosphere and its interactions with the solar wind.

To obtain "ground truth" -- observations on the surface verifying those made from space -- the Russian Mars '96 spacecraft will deploy two landers that will touch down in the northern hemisphere in a region called Amazonis Planitia and two penetrators that will impact and lodge themselves anywhere from 3 to 20 feet (1 to 6 meters) underground. These probes will furnish details of the atmosphere and surface at the specific locations in which they land. NASA is contributing two experiments to Mars '96: the Mars Oxidation Experiment, which will measure the oxidation rate of the Martian environment, and the Tissue-Equivalent Proportional Counter, which will study the radiation environment in interplanetary space and near Mars.

Mars Pathfinder will deploy a mobile rover that will characterize rocks and soil in a landing area over hundreds of square yards (or meters) on Mars. Pathfinder's instruments and mobile rover are designed to provide an in-depth portrait of Martian rocks and surface materials over a relatively large landing area, thereby giving scientists an immediate look at the crustal materials that make up the red planet.

Pathfinder Arrival in July 1997

Although the last to leave Earth, Mars Pathfinder takes a shorter flight path and will be the first of the three spacecraft to arrive at Mars, touching down in Ares Vallis on July 4, 1997.

Pathfinder is designed to demonstrate an innovative approach to landing a spacecraft and rover on the surface of Mars. Pathfinder will dive through the upper atmosphere of Mars on a parachute, then inflate a huge cocoon of airbags to cushion its impact. The spacecraft will collect engineering and atmospheric science data along its descent to the ground.

The primary objective of the mission is to test this low-cost method of delivering a spacecraft, science payload and free-ranging rover to the surface of the red planet. Landers and rovers of the future will share the heritage of spacecraft designs and technologies that evolve from this pathfinding mission.

Once on the surface, the lander's first task will be to transmit engineering and science data collected during descent through the thin atmosphere of Mars. Then its camera will take a panoramic image of its surroundings and begin transmitting the data directly to Earth at a few

thousand bits per second. Much of Pathfinder's mission after this will be focused on collecting atmospheric and surface composition data, and supporting the rover by storing and transmitting images captured by its cameras. Pathfinder's nominal mission lifetime is approximately 30 "sols," or Martian days (about the same number of Earth days).

Pathfinder's rover, Sojourner, will be carried to Mars in a stowed configuration with its chassis and wheels folded up like an accordion. Once its solar cells are exposed to the Sun, the rover will power up and stand to its full height before leaving the lander. Driving off onto the floor of an ancient flood plain believed to contain a wide variety of rocks, Sojourner will explore the surface independently, relying on the lander primarily for communications with Earth.

Mars Global Surveyor and Mars '96

Two months later, NASA's Mars Global Surveyor and Russia's Mars '96 orbiter will arrive at Mars on September 11 and 12, 1997, respectively.

At first, Mars Global Surveyor will be in a highly elliptical orbit and spend four months dipping lower and lower into Mars' upper atmosphere using a technique called aerobraking to bring it into a low-altitude, nearly circular mapping orbit over the poles. By March 1998, Surveyor will be ready to begin data collection, compiling a systematic database as it surveys the Martian landscape and photographs unique features, such as the polar caps and Mars' network of sinuous, intertwining river channels.

Mars '96 carries a dozen instruments and a dozen smaller devices designed to study the evolution of the Martian atmosphere, surface and interior. In addition to meteorological and seismic instruments, the spacecraft carries instruments to image the Martian surface, explore the chemistry and water content of rocks and attempt to detect and measure the Martian magnetic field.

The Jet Propulsion Laboratory manages the Mars Pathfinder and Mars Global Surveyor missions for NASA's Office of Space Science, Washington, DC. Lockheed Martin Astronautics Inc., Denver, CO, is NASA's industrial partner for development and operation of the Mars Global Surveyor spacecraft. Russia's Mars '96 is managed by the Russian Space Agency. The Russian Academy of Sciences, Moscow, Russia, is responsible for the Mars '96 science payload.

[End of General Release]

Media Services Information

NASA Television Transmission

NASA Television is available through the Spacenet 2 satellite on transponder 5, channel 9, 69 degrees west longitude, frequency 3880 MHz, audio subcarrier 6.8 MHz, horizontal polarization. The schedule for television transmissions during the launch periods in November and December 1996 will be available from the Jet Propulsion Laboratory, Pasadena, CA; Kennedy Space Center, FL; and NASA Headquarters, Washington, DC.

Status Reports

Status reports on mission activities for Mars Global Surveyor and Mars Pathfinder will be issued by the Jet Propulsion Laboratory's Public Information Office. They may be accessed online as noted below.

Briefings

A pre-launch briefing on the missions and science objectives of Mars Pathfinder and Mars Global Surveyor will air on NASA Television on Oct. 16, 1996, originating from NASA Headquarters, Washington, DC. Pre-launch briefings at Kennedy Space Center will be held the day before each of the two American launches.

Internet Information

Extensive information on Mars Global Surveyor and Mars Pathfinder, including an electronic copy of this press kit, press releases, fact sheets, status reports and images, is available from the Jet Propulsion Laboratory's World Wide Web home page at **http://www.jpl.nasa.gov**. This site may also be accessed via Internet using anonymous file transfer protocol (FTP) at the address **ftp.jpl.nasa.gov**. For users without Internet access, the site may additionally be accessed by dialup modem at the telephone number 818/354-1333.

Quick Facts

Mars Global Surveyor

Spacecraft dimensions: Bus 5 by 5 by 10 feet (1.5 by 1.5 by 3 meters); 40 feet (12 meters) across with fully deployed solar panels
Weight: 2,337 pounds (1,060 kilograms) with fuel
Science instruments: thermal emission spectrometer; laser altimeter; magnetometer/electron reflectometer; ultra-stable oscillator; camera; radio relay system
Launch date: November 6, 1996; period continues through November 25
Mars arrival date: September 11, 1997; primary mission March 15, 1998-January 31, 2000

Mars Pathfinder

Lander

Spacecraft dimensions: Tetrahedron, three sides and base, standing 3 feet (0.9 meter) tall
Weight: 1,962 pounds (890 kilograms) dry; 2,062 pounds (990 kilograms) with fuel
Science instruments: imager; magnets for measuring magnetic properties of soil; wind sock; atmospheric structure instrument/meteorology package.
Launch date: December 2, 1996; period continues through December 31, 1996
Mars arrival date: July 4, 1997
Primary mission: 30 days

Rover

Rover dimensions: 2 feet (65 cm) long by 1.5 feet (48 cm) wide by 1 foot (30 cm) tall
Weight: 22 pounds (10 kilograms)
Science instruments: alpha proton x-ray spectrometer; 3 cameras; also technology experiments
Primary mission: 7 days

Mars ’96

Orbiter

Spacecraft dimensions: 10 by 20 by 29.5 feet (3 by 3 by 9 meters) tall
Weight: 13,200 pounds (6,000 kilograms) with fuel
Science instruments: 12 instruments and 12 devices
Launch date: November 16, 1996; window continues through November 22
Mars arrival date: September 12, 1997
Primary mission: 2 years

Surface stations (2)

Dimensions: During cruise, 3.2 by 3.2 feet (1 by 1 meter); landed and deployed, about 3.5 by 2 feet (1.08 by 0.59 meters)
Weight: 110 pounds (50 kilograms) each

Penetrators (2)

Dimensions: 6.4 feet (2 meters) long by 1.9 feet (0.6 meter) in diameter each
Weight: 143 pounds (65 kilograms) each

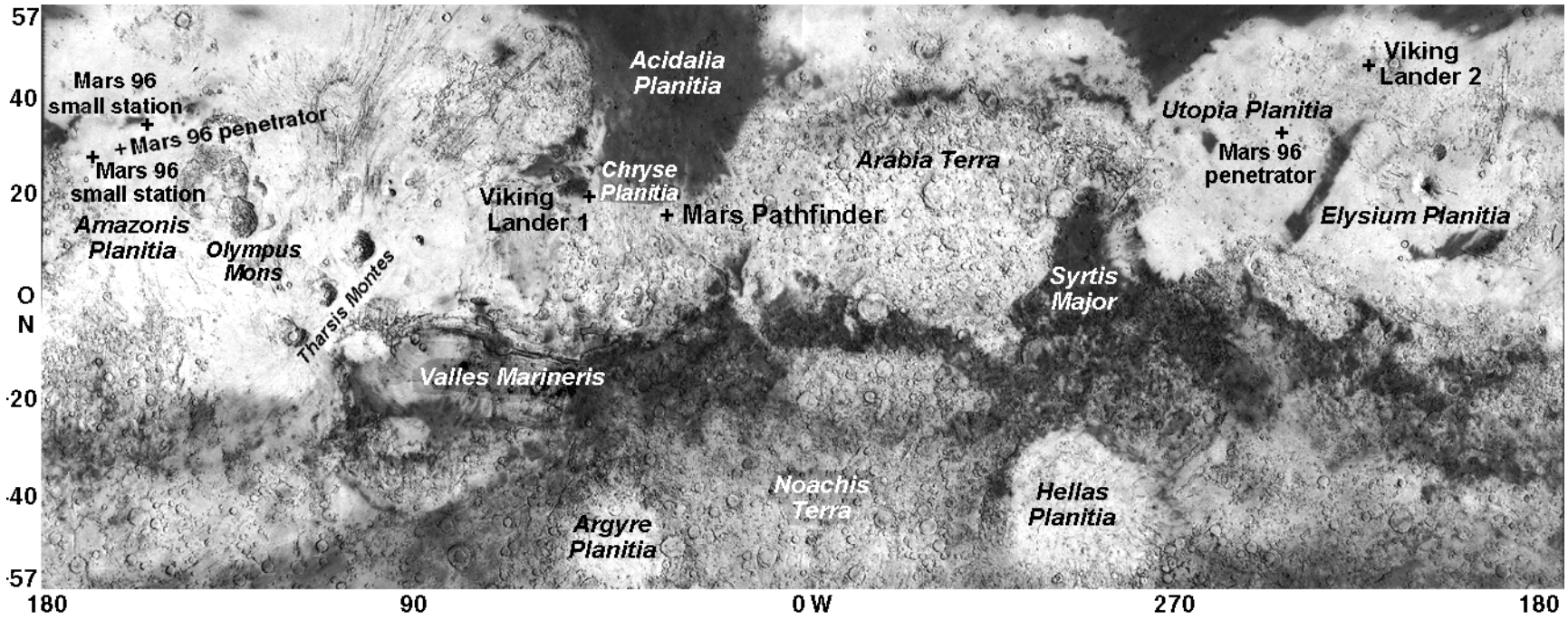

Mars Landing Sites

Mars at a Glance

General

❏ One of five planets known to ancients; Mars was Roman god of war, agriculture and the state
❏ Reddish color; at times the 3rd brightest object in night sky after the Moon and Venus

Physical Characteristics

❏ Average diameter 4,217 miles (6,780 kilometers); about half the size of Earth, but twice the size of Earth's Moon
❏ Mass 1/10th of Earth's; gravity only 38 percent as strong as Earth's
❏ Density 3.9 times greater than water (compared to Earth's 5.5 times greater than water)
❏ No magnetic field detected

Orbit

❏ Fourth planet from the Sun, the next beyond Earth
❏ About 1.5 times farther from the Sun than Earth is
❏ Orbit elliptical; distance from Sun varies from a minimum of 128.4 million miles (206.7 million kilometers) to a maximum of 154.8 million miles (249.2 million kilometers); average distance from Sun, 141.5 million miles (227.7 million kilometers)
❏ Revolves around Sun once every 687 Earth days
❏ Rotation period (length of day in Earth days) 24 hours, 37 min, 23 sec (1.026 Earth days)
❏ Poles tilted 25 degrees, creating seasons similar to Earth's

Environment

❏ Atmosphere composed chiefly of carbon dioxide (95.3%), nitrogen (2.7%) and argon (1.6%)
❏ Surface atmospheric pressure less than 1/100th that of Earth's average
❏ Surface temperature averages -64 F (-53 C); varies from -199 F (-128 C) during polar night to 80 F (27 C) at equator during midday at closest point in orbit to Sun

Features

❏ Highest point is Olympus Mons, a huge shield volcano more than 52,000 feet (15,900 meters) high and 370 miles (600 kilometers) across; has about the same area as Arizona
❏ Canyon system of Valles Marineris is largest and deepest known in solar system; extends more than 2,500 miles (4,000 kilometers) and has 3 to 6 miles (5 to 10 kilometers) relief from floors to tops of surrounding plateaus
❏ "Canals" observed by Giovanni Schiaparelli and Percival Lowell about 100 years ago were a visual illusion in which dark areas appeared connected by lines. The Viking missions of the 1970s, however, established that Mars has channels probably cut by ancient rivers

Moons

❏ Two irregularly shaped moons, each only a few kilometers wide
❏ Larger moon named Phobos ("fear"); smaller is Deimos ("terror"), named for attributes personified in Greek mythology as sons of the god of war

Historical Mars Missions

Mission, Country, Launch Date, Purpose, Results

Mars 1, USSR, 11/1/62, Mars flyby, lost at 65.9 million miles
Mariner 3, U.S., 11/5/64, Mars flyby, shroud failed
Mariner 4, U.S. 11/28/64, first successful Mars flyby 7/14/65, returned 21 photos
Zond 2, USSR, 11/30/64, Mars flyby, failed to return planetary data
Mariner 6, U.S., 2/24/69, Mars flyby 7/31/69, returned 75 photos
Mariner 7, U.S., 3/27/69, Mars flyby 8/5/69, returned 126 photos
Mariner 8, U.S., 5/8/71, Mars flyby, failed during launch
Mars 2, USSR, 5/19/71, Mars orbiter/lander arrived 11/27/71, no useful data returned
Mars 3, USSR, 5/28/71, Mars orbiter/lander, arrived 12/3/71, some data and few photos
Mariner 9, U.S., 5/30/71, Mars orbiter, in orbit 11/13/71 to 10/27/72, returned 7,329 photos
Mars 4, USSR, 7/21/73, failed Mars orbiter, flew past Mars 2/10/74
Mars 5, USSR, 7/25/73, Mars orbiter, arrived 2/12/74, lasted a few days
Mars 6, USSR, 8/5/73, Mars orbiter/lander, arrived 3/12/74, little data return
Mars 7, USSR, 8/9/73, Mars orbiter/lander, arrived 3/9/74, little data return
Viking 1, U.S., 8/20/75, Mars orbiter/lander, orbit 6/19/76-1980, lander 7/20/76-1982
Viking 2, U.S., 9/9/75, Mars orbiter/lander, orbit 8/7/76-1987, lander 9/3/76-1980;
combined, the Viking orbiters and landers returned 50,000+ photos
Phobos 1, USSR, 7/7/88, Mars/Phobos orbiter/lander, lost 8/89 en route to Mars
Phobos 2, USSR, 7/12/88, Mars/Phobos orbiter/lander, lost 3/89 near Phobos
Mars Observer, U.S., 9/25/92, lost just before Mars arrival 8/21/93

Why Mars?

Of all the planets in the solar system, Mars is the most like Earth and the planet most likely to support eventual human expeditions. Earth's Moon and Mercury are dry, airless bodies. Venus has suffered a runaway greenhouse effect, developing a very dense carbon dioxide atmosphere that has resulted in the escape of all its water and the rise of torrid, inhospitable surface temperatures of nearly 900 degrees Fahrenheit (500 degrees Celsius). Mars, on the other hand, has all of the ingredients necessary for life, including an atmosphere, polar caps and large amounts of water locked beneath its surface. Mars, in fact, is the only other terrestrial planet thought to have abundant subsurface water that could be mined and converted into its liquid form to support human life.

Compared to Earth, Mars is about 4,200 miles (6,800 kilometers) in diameter, about half the diameter and about one-eighth the volume of Earth. Mars turns on its axis once every 24 hours, 37 minutes, making a Martian day — called a "sol" — only slightly longer than an Earth day.

Early Mars may have been like early Earth. Current theories suggest that, early in its history, Mars was once much warmer, wetter and enveloped in a much thicker atmosphere. The planet's poles are tilted to the plane of its orbit at an angle of 25 degrees — about the same amount as Earth, whose poles are titled at 23.3 degrees to the ecliptic plane. Because of its tilted axis, Mars has Earth-like seasonal changes and a wide variety of weather phenomena. Although its atmosphere is tenuous, winds and clouds as high as 15 miles (25 kilometers) above the surface can blow across stark Martian deserts. Low-level fogs and surface frost have been observed by spacecraft. Spacecraft and ground-based observations have revealed huge dust storms that often start in the southern regions and sometimes spread across the entire planet.

Mars is the most plausible beginning point to try to answer the questions: Are we alone in the universe? Is life a cosmic accident or does it develop anywhere given the proper environmental conditions?

On Earth, evidence for life can be found in some of the oldest rocks, dating from the end of Earth's bombardment by comets and meteors around 4 billion years ago. Surfaces on Mars that are the same age show remains of ancient lakes, which suggests that liquid water flowed on the surface at one time and the climate was both wetter and substantially warmer. If this proves to be true, then further exploration may reveal whether life did develop on Mars at some point early in its history. If it did not, scientists will want to know why it didn't. Or perhaps they will be able to determine whether life that began early on in Mars' evolution could still survive in some specialized niches such as hydrothermal systems near volcanoes.

Exploring Mars will also provide us with a better understanding of significant events that humankind may face in the future as Earth continues to evolve. What are the factors involved in natural changes in a planet's climate, for instance? On Earth, one of the most important questions now being studied is whether or not human activities are contributing to

global warming. Could these climate changes bring about negative environmental changes such as sea level rise due to the melting of the ice caps? Mars provides a natural laboratory for studying climate changes on a variety of time scales. If Mars in the past was warmer and wetter, and had a thicker atmosphere, why did it change?

Layered deposits near the Martian polar caps suggest climatic fluctuations on a shorter time scale. If scientists can learn about the important factors controlling climatic changes on another planet, they may be able to understand the consequences of human-induced changes on Earth.

Mars is an excellent laboratory to engage in such a study. Earth and Venus are active environments, constantly erasing all traces of their evolution with dynamic geological processes. On Mercury and on Earth's Moon, only relatively undisturbed ancient rocks are present. Mars, by contrast, has experienced an intermediate level of geological activity, which has produced rocks on the surface that preserve the entire history of the solar system. Sedimentary rocks preserved on the surface contain a record of the environmental conditions in which they formed and, consequently, any climate changes that have occurred through time.

The Search for Life

After years of exhaustive study of the data returned by the Viking spacecraft from their biology experiments, most scientists concluded that it is unlikely that any life currently exists on the surface on Mars. Centuries of fascination about the possibility of intelligent life on the red planet seemed to fade.

Since that time 20 years ago, though, much has been learned about the origins of life on Earth. Paleobiologists learned that the smallest single-celled microscopic organisms had sprung from hot volcanic vents at the very bottom of Earth's oceans. They learned that the most fundamental carbonaceous organic material demonstrated cell division and differentiated cell types, very similar to other fossils and living species.

Geologists learned that these organisms could exist in regions along the floors of oceans in environments akin to pressure-cookers, at extremely hot temperatures devoid of light and prone to extreme pressures that no human being could survive. With new technologies and highly sophisticated instruments, they began to measure the skeletons of bacteria-like organisms lodged deep within old rocks.

Then, in August 1996, a NASA-funded team of scientists announced its findings of the first organic molecules thought to be from Mars. The findings reignited the age-old question: Are we alone in the universe?

The two-year investigation by a team led by scientists from NASA's Johnson Space Center, Houston, TX, revealed evidence that strongly suggested primitive life may have existed on Mars more than 3.6 billion years ago. Researchers discovered an igneous meteorite in Earth's Antarctica bearing trapped gases that suggested it had been blasted away from the sur-

face of Mars in some impact event; the rock was dated to about 4.5 billion years old, the period when Mars and its terrestrial neighbors were forming. According to scientists on the team, the rock contains fossil evidence of what they believe may have been ancient microorganisms.

The team studied carbonate minerals deposited in the fractures of the 4-pound (2-kilogram), potato-shaped Martian meteorite. They concluded that although some of the carbonate minerals were probably the result of carbon dioxide from Mars' atmosphere dissolved in water, living organisms also may have assisted in the formation of the carbonate — and some remains of the microscopic organisms may have become fossilized, in a fashion similar to the formation of fossils in limestone on Earth. Then, 16 million years ago, a huge comet or asteroid struck Mars, ejecting a piece of the rock from its subsurface location with enough force to escape the planet. For millions of years, the chunk of rock floated through space. It encountered Earth's atmosphere 13,000 years ago and fell in Antarctica as a meteorite.

In the tiny globs of carbonate, researchers found a number of features that can be interpreted as possible past life. Team members from Stanford University detected organic molecules called polycyclic aromatic hydrocarbons (PAHs) concentrated in the vicinity of the carbonate. Researchers from Johnson Space Center found mineral compounds commonly associated with microscopic organisms and the possible microscopic fossil structures.

Most of the team's findings were made possible only because of very recent technological advances in high-resolution scanning electron microscopy and laser mass spectrometry. Just a few years ago, many of the features that they reported were undetectable. Although past studies of the meteorite in question — designated ALH84001 — and others of Martian origin failed to detect evidence of past life, they were generally performed using lower levels of magnification, without the benefit of the technology used in this research. In addition, the recent discovery of extremely small bacteria on Earth, called nanobacteria, prompted the team to perform this work at a much finer scale than had been done in the past.

The findings, presented in the August 16, 1996, issue of the journal Science, have been put forth to the scientific community at large for further study. The team was co-led by Johnson Space Center planetary scientists Dr. David McKay, Dr. Everett Gibson and Kathie Thomas-Keprta of Lockheed Martin, with the major collaboration of a Stanford University team headed by chemistry professor Dr. Richard Zare, as well as six other NASA and university partners.

Whether or not the evidence stands up to scientific scrutiny, the suggestion alone has renewed interest in exploring the planets, stars and galaxies outside of the Milky Way galaxy. The questions resound: Does life exist elsewhere in the universe? And why does it exist at all? Did life as we know it originate on Earth or did it spring from other planets, only to be transported to Earth, where it found the most advantageous niche for continuing evolution?

In the year 2003 or 2005, NASA plans to send to Mars a sample return mission, a robotic spacecraft that will be able to return soil and rock samples to Earth for direct study much as the Apollo astronauts returned hundreds of pounds of lunar rocks to Earth. With renewed interest in the recent Mars meteorite findings, the mission may realize a higher priority and come to

fruition sooner than 2005. Additional debate and scientific experimentation with Martian meteorites in the next several years may bring about an answer that may become a turning point in the history of civilization.

The Multi-Year Mars Program

Launch of the 1996 Mars Global Surveyor kicks off a 10-year-long U.S. program of Mars exploration. The program is designed to send pairs of inexpensive spacecraft to Mars every 26 months through 2005.

Although they are to be launched within a month of each other in late 1996, Mars Global Surveyor and Mars Pathfinder have their roots in two separate NASA programs. Mars Pathfinder was approved as a standalone project under NASA's Discovery program, which was created in 1992 to fund low-cost solar system missions. Mars Global Surveyor, on the other hand, is the first in a multi-year series of missions under the Mars Surveyor program. After 1996, current plans call for Mars Surveyor to send two spacecraft to Mars during each launch window in 1998, 2001 and 2003, and a single spacecraft in 2005.

By that time, NASA will have a fleet of small spacecraft with highly focused science goals probing and watching the planet, setting in place a new way of exploring the solar system. Based on the space agency's philosophy of bringing faster, better and cheaper missions to fruition, combinations of orbiters and landers will take advantage of novel microtechnologies — lasers, microprocessors and electronic circuits, computers and cameras the size of a gaming die — to deliver an ingenious armada of miniaturized payloads to Earth's planetary neighbor.

U.S. Mars missions planned at this point are:

1996:

- **Mars Pathfinder** (Discovery mission). Demonstrate low cost-entry and landing system, and rover mobility; initiates mineralogy studies; continue study of surface characteristics and Martian weather. Cost: $171 million (capped at $150 million in fiscal year 1992 dollars), plus $25 million for rover.

- **Mars Global Surveyor.** Global reconnaissance of physical and mineralogical surface characteristics, including evidence of water; determine global topography and geologic structure of Mars; assess atmosphere and magnetic field during seasonal cycles; provide communication relay for Russian Mars '96 landers and U.S. Mars Surveyor '98 lander and microprobes. Cost: $155 million.

1998:

- **Mars Surveyor '98 Orbiter.** Characterization of the Martian atmosphere, including definition of atmospheric water content during seasonal cycles.

- **Mars Surveyor '98 Lander.** Access past and present-day water reservoirs on Mars; surface chemistry, topology and mineralogy; continue weather studies. The spacecraft will also

deliver two innovative soil microprobes developed under NASA's New Millennium program. Combined cost of both 1998 missions: $187 million, plus $26 million for the microprobes.

2001:

- **Mars Surveyor '01 Orbiter.** Characterize mineralogy and chemistry of surface, including identification of surface water reservoirs.

- **Mars Surveyor '01 Lander.** To be determined. NASA is exploring the possibility of delivering a Russian rover or small station launched by a Russian launch vehicle; the alternative would be a U.S. rover for studies of chemistry and mineralogy. Combined cost of both 2001 missions: approximately $200 million.

2003:

- **To be determined**. NASA is exploring the possibility of a rover that would be used for sample collection and caching for later pickup by a sample return mission. Cost: approximately $200 million.

2005:

- **To be determined.** NASA is exploring the possibility of a Mars sample return mission if found to be affordable. Funds available from the Mars Surveyor program: approximately $200 million.

International Cooperation

International collaboration on all Mars missions will be an important aspect of exploration in the next decade. Many space agencies around the world are considering participation in the planning stages of future missions, including those of Russia, Japan and many European countries. Scientists from the United States are consulting with international partners on the best ways to combine their efforts in Mars exploration. This may result in new proposals for cooperative missions in the first decade of the 21st century.

Among the ongoing programs taking shape is one called "Mars Together," a concept for the joint exploration of Mars by Russia and the United States. The program was initiated in the spring of 1994 and bore its first fruit in the summer of 1995. A Russian co-principal investigator and Russian hardware were incorporated into one experiment, the Pressure Modulator Infrared Radiometer, to be flown on NASA's Mars Surveyor 1998 orbiter. Vassili Moroz of the Russian Academy of Sciences Space Research Institute (IKI) in Moscow will co-lead the experiment with Dr. Daniel McCleese of NASA's Jet Propulsion Laboratory. The Russian institute will also provide the optical bench for the radiometer. In addition, IKI will furnish a complete

science instrument, the LIDAR (Laser Detection and Ranging) Atmospheric Sounder, for the 1998 Mars Surveyor lander. Dr. Sergei Pershin of IKI is the Principal Investigator.

Meanwhile, more extensive collaboration is under consideration for a 2001 mission. A joint U.S.-Russian Mars Together team has been formed to study a combined U.S.-Russian spacecraft launched by a Russian Molniya rocket. The exact configuration is still under study, but Russia expects to include a descent module containing a rover, called Marsokhod, in its portion of the payload.

NASA and the Russian Space Agency have agreed to start planning toward a potential sample return mission in the middle of the first decade of the 21st century. A joint science team has been charted to study this possibility.

Japan is also building an orbiter, called Planet B, to study the Martian upper atmosphere and its interaction with the solar wind. The spacecraft, to be launched in August 1998, will carry a U.S. neutral mass spectrometer instrument to investigate the upper atmosphere, in addition to a variety of Japanese instruments.

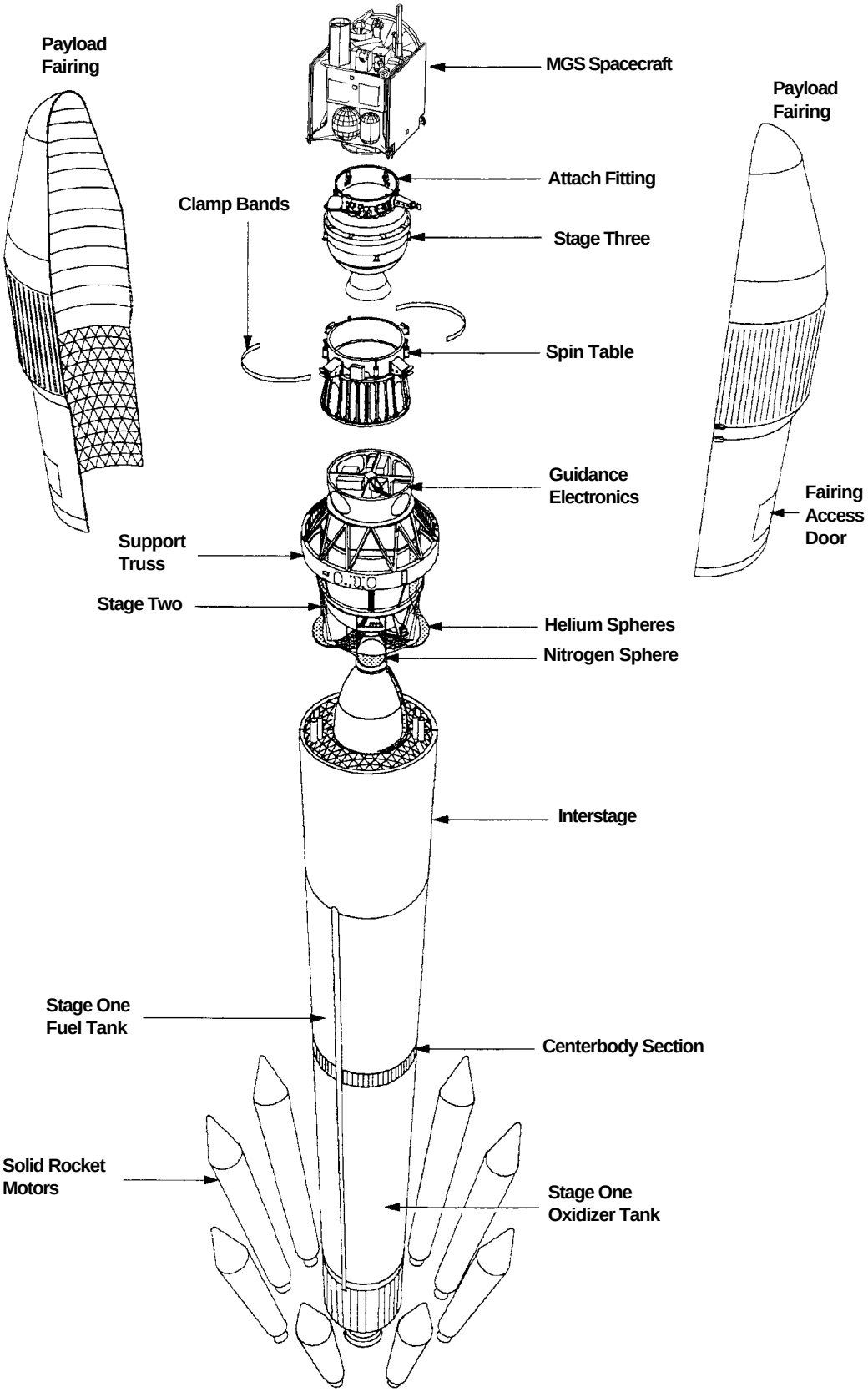

Mars Global Surveyor's Delta II launch vehicle

Mars Global Surveyor

The study of Mars' early history, geology and climate will be the centerpiece of the Mars Global Surveyor mission. The spacecraft, which will orbit Mars in a near-polar orbit that will take it over most of the planet, carries a suite of sophisticated remote-sensing instruments designed to create a global portrait of Mars by mapping its topography, magnetism, mineral composition and atmosphere. The instruments are flight spares from experiments flown on Mars Observer, which was lost shortly before Mars arrival in 1993. With this comprehensive archive of the red planet, scientists will be able to address a multitude of questions surrounding the evolution of Mars and all the inner planets of the solar system.

Mission Overview

Launch. A Delta II 7925A launch vehicle will lift the 2,337-pound (1,060-kilogram) Mars Global Surveyor spacecraft into orbit during a launch window extending from November 6-25, 1996 from launch pad 17A at Cape Canaveral, FL. There are two near-instantaneous launch opportunities each day through November 15; the two launch opportunities on November 6 are at 12:11 p.m. Eastern Standard Time and 1:15 p.m. EST. The launch must occur at exactly that time or the opportunity closes. Beginning on November 16, only one launch opportunity is available each day. On November 16, the opportunity occurs at 1:36 p.m. EST.

After liftoff, the first stage of the three-stage Delta rocket and the nine solid-fuel strap-on boosters will lift the spacecraft to an altitude of about 70 miles (115 kilometers) above Earth. From that point, the Delta's second stage will take over and boost the payload to a circular parking orbit 115 miles (185 kilometers) above Earth, at about launch plus 10 minutes. After parking orbit insertion, the booster and spacecraft will coast for between 24 and 37 minutes, depending on the actual launch date, until reaching a position over the eastern Indian Ocean. At that time, the second stage will restart and fire for nearly two minutes to raise the apogee, or high point, of the parking orbit.

Small rockets will be used to spin up the Delta's third stage and spacecraft to 60 rpm; after separation from the second stage, the third-stage engine will be ignited. The third stage, a Star 48B solid rocket, will fire for 87 seconds to complete the trans-Mars injection burn sending the spacecraft on its flight path to the red planet. Once the burn is completed, but before the third stage is jettisoned, a yo-yo cable device will deploy from the Star 48B to de-spin the spacecraft. The de-spin will take place several minutes after burnout of the launch vehicle's third stage.

Next, the spacecraft will separate from the third stage and its solar arrays will be swept forward 30 degrees; Mars Global Surveyor will slow to a spin rate of one revolution every 100 minutes. The first signal from the spacecraft will be received about 25 minutes after trans-Mars injection by the 112-foot-diameter (34-meter) antenna of NASA's Deep Space Network in Canberra, Australia.

Trans-Mars cruise. The spacecraft will take between 301 and 309 days to reach the red planet on a flight path known as a Type 2 trajectory, depending on the Earth departure date within the 20-day launch period. A Type 2 trajectory takes a spacecraft more than 180 degrees around the Sun and, compared with other trajectories, is a slower way to reach Mars. However, because the spacecraft is traveling at a slower velocity, it will require less propellant to slow down once it is ready to be captured in orbit around the destination planet. A launch at the opening of the launch period on November 6, 1996, would result in a Mars arrival date of September 11, 1997, while a launch at the close of the period on November 25, 1996, would result in arrival on September 22, 1997.

Seven days after launch, the spacecraft's propellant tanks will be pressurized. Eight days later (launch plus 15 days), Mars Global Surveyor will fire its main engine in the first of four trajectory correction maneuvers to fine-tune its flight path.

On the first part of its flight, known as inner cruise, all spacecraft communications with Earth will occur through its broad-beam low-gain antenna. The dish-shaped, narrow-beam high-gain antenna sits on the spacecraft in a stowed, body-fixed orientation during cruise, making communications with Earth through the high-gain antenna impossible during the first part of interplanetary cruise unless the spacecraft is turned to point the high-gain antenna directly at Earth.

Outer cruise will begin when the spacecraft switches from the low-gain to the high-gain antenna for communications with Earth. The exact time when the switch will become feasible depends on the angle between the Sun and Earth as seen from the spacecraft. When this angle falls to a level low enough, the solar panels will be able to collect adequate power while the spacecraft is pointing the high-gain antenna directly at Earth. This angle starts at about 120 degrees at the time of launch and falls to less than 60 degrees by January 6, 1997, assuming a launch on November 6, 1996, and switch-over thus would take place on January 6, 1997.

Three more trajectory correction maneuvers are planned during cruise. Following the first such thruster firing 15 days after launch, a second will be executed 120 days later; a third will be executed 30 days after the second; and a fourth will be executed 20 days before Mars orbit insertion. Assuming a launch on November 6, 1996 launch date, these maneuvers would take place March 21, April 20 and August 22, 1997, respectively.

Most of the outer cruise will consist of minimal activity as the spacecraft completes its journey to Mars. The vast majority of the events will involve acquiring navigation and tracking data to support the remaining trajectory correction maneuvers. During the last 30 days of approach to Mars, the focus will be on final targeting of the spacecraft to the proper aim point, and preparations for orbit insertion.

Some science observations during approach to Mars are also planned, including four approach pictures of Mars. The spacecraft's camera will take global pictures of Mars on 120

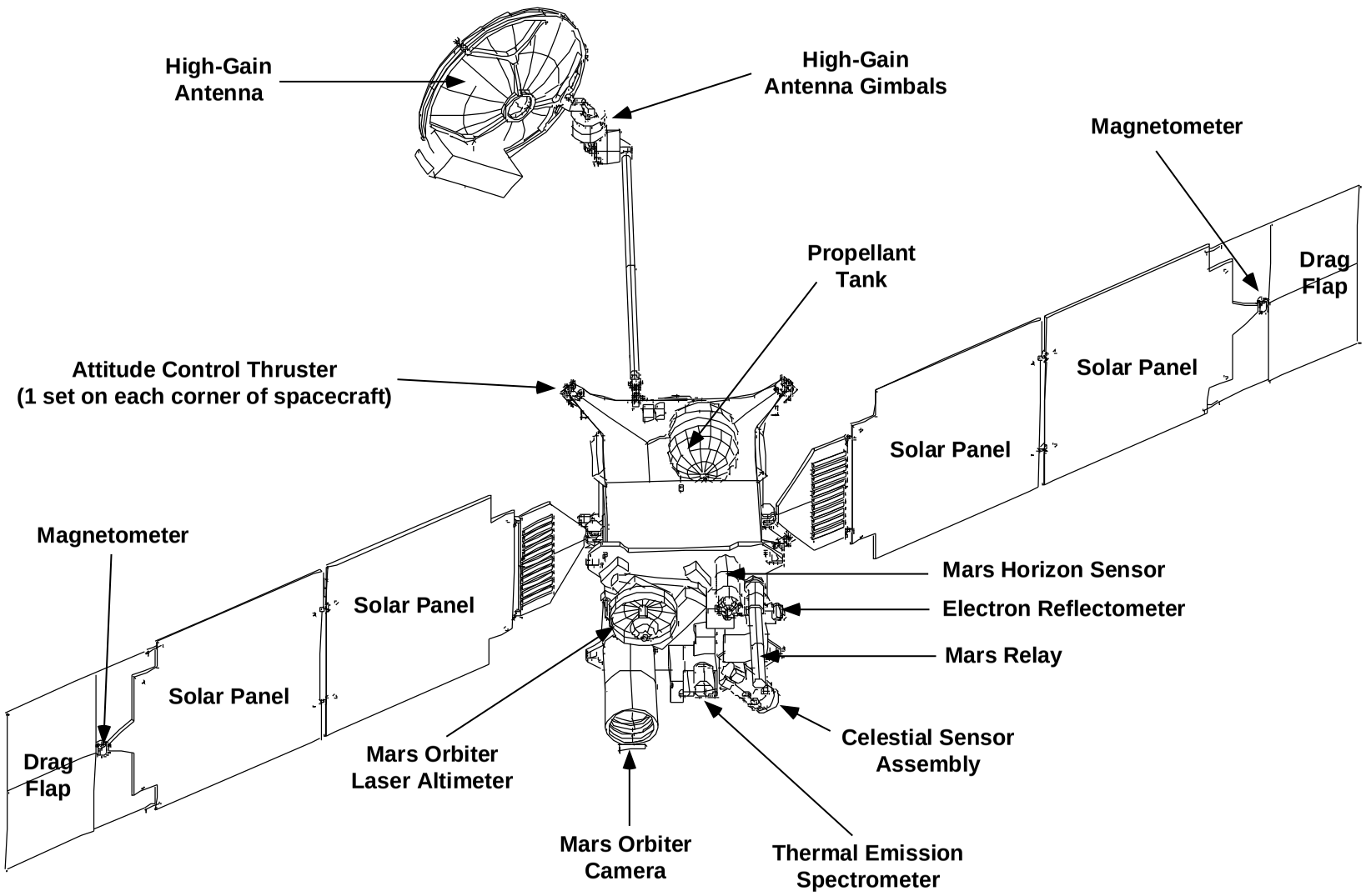

Mars Global Surveyor spacecraft

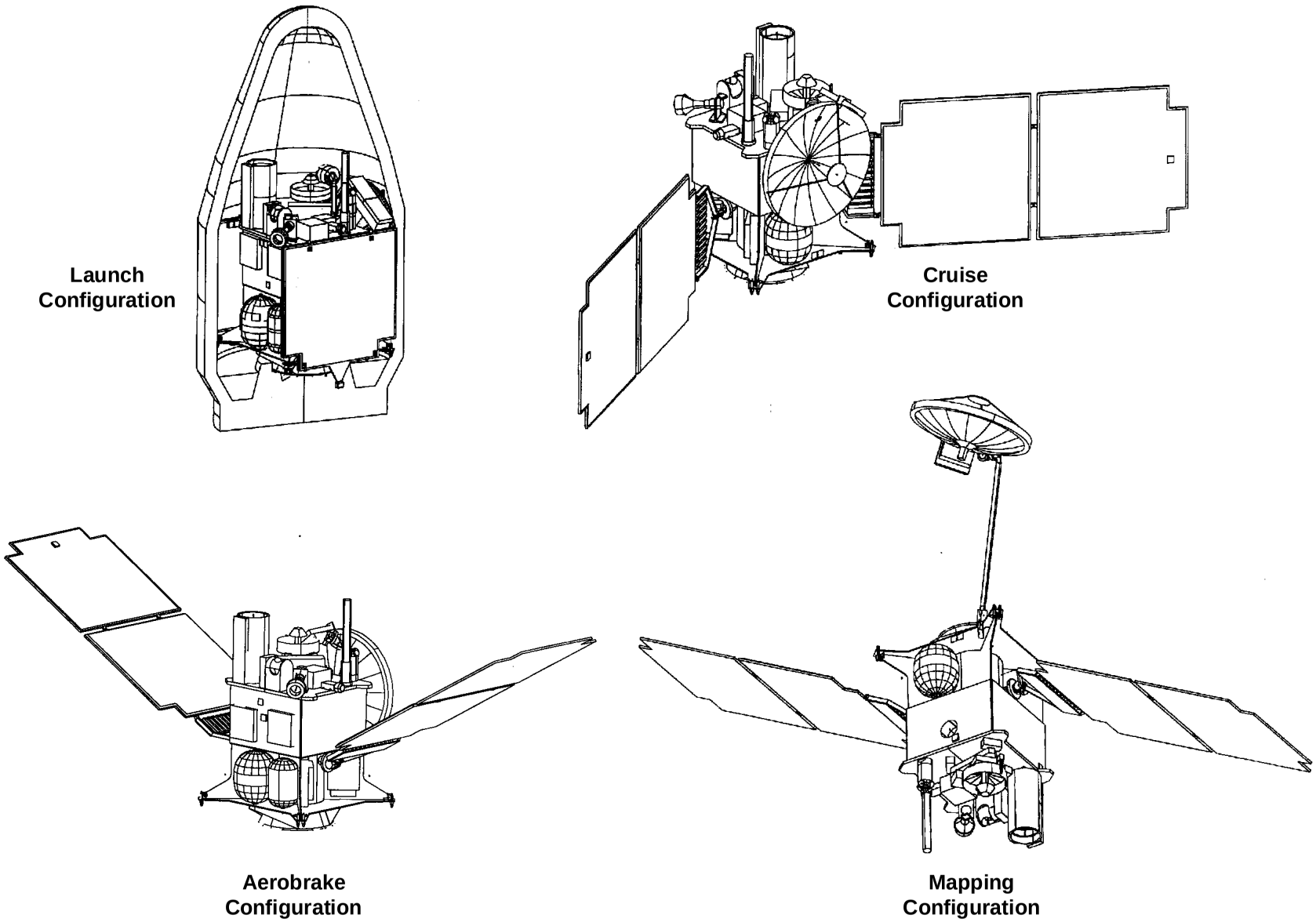

Mars Global Surveyor configurations

days before Mars arrival; then at 90 days before arrival; at 60 days before arrival; and finally, at 30 days before Mars arrival.

Mars orbit insertion. Mars Global Surveyor will perform an attitude correction maneuver once it reaches the orbit of Mars to turn the spacecraft's main engine toward the direction of its motion, or toward Mars. Then the spacecraft will fire its main engine, a 600-newton engine, for approximately 20 to 25 minutes to slow down. By completion of the orbit insertion burn, the spacecraft will have slowed down by about 2,230 miles per hour (1,000 meters per second) with respect to Mars.

Aerobraking. Because of mass limits imposed by the lifting capabilities of the Delta II booster, the Mars Global Surveyor spacecraft will not carry enough propellant to be able to put itself into its final low-altitude mapping orbit with an engine firing. As a result, the spacecraft will rely on aerobraking, an innovative mission-enabling braking technique, first demonstrated by the Magellan spacecraft at Venus, to trim its initial highly elliptical capture orbit down to the altitudes for the mapping orbit.

During each of its orbits shortly after Mars arrival, the spacecraft will pass through the upper fringes of the Martian atmosphere each time it reaches periapsis, the point in its orbit closest to the planet. Friction from the atmosphere will cause the spacecraft to be dragged closer to the surface and lose some of its momentum during each orbit. Loss of momentum will also lower the spacecraft's apoapsis, or the point in its orbit farthest from Mars.

Aerobraking will take place over four months, beginning with an initial "walk-in" phase. The spacecraft's apoapsis and periapsis will be gradually adjusted over the months as scientists and engineers learn more about the density of Mars' upper atmosphere, which is poorly understood today. As the spacecraft continues to drop into a lower orbit, the navigation team will be able to gauge the atmospheric density and its variations from one orbit to another. In addition, the spacecraft is scheduled to fire its thrusters four times during the aerobraking phase. The final mapping orbit will be nearly circular, at 217 by 254 miles (350 by 410 kilometers), or an average of 234 miles (378 kilometers) above the planet's surface.

After the mapping orbit is achieved and frozen in place, spacecraft systems will be deployed and instruments will be checked-out over a 10-day period.

Prime mission. Once in its mapping orbit, Mars Global Surveyor will complete one orbit around Mars about every two hours. Each new orbit will bring the spacecraft over a different part of Mars. As the weeks pass, the spacecraft will create a global portrait of Mars — capturing the planet's ancient cratered plains, huge canyon system, massive volcanoes, channels and frozen polar caps. During its mission, Mars Global Surveyor will pass over the terrain where the two U.S. Viking landers — separated by more than 4,000 miles (6,400 kilometers) — have rested for 21 years.

The primary mapping mission will begin on March 15, 1998, and last until January 31, 2000 — a period of one Martian year or 687 Earth days (almost two Earth years). The space-

craft will transmit its recorded data back to Earth once a day during a single 10-hour tracking pass by antennas of the Deep Space Network. During mapping operations, the spacecraft will return more than 600 billion bits of scientific data to Earth — more than that returned by all previous missions to Mars and, in fact, roughly equal to the total amount of data returned by all planetary missions since the beginning of planetary exploration with the exception of the Magellan mission to Venus.

As Mars rotates beneath the spacecraft, a suite of onboard instruments will record a variety of detailed information. Detectors will measure radiation — visible and infrared — from the surface to deduce the presence of minerals that make up Mars. These same instruments will record infrared radiation from the thin Martian atmosphere, gathering data about its changing pressure, composition, water content and dust clouds. By firing short pulses of laser light at the surface and measuring the time the reflections take to return, a laser altimeter will map out the heights of Mars' mountains and the depths of its valleys.

The camera system will use wide- and narrow-angle lenses to record landforms and atmospheric cloud patterns. Another sensor will look for a Martian magnetic field. As the telecommunications subsystem transmits information back to Earth, engineers will use the signal of the orbiting spacecraft to derive data about the planet's atmosphere and gravitational field.

By the time global mapping operations are over, Mars Global Surveyor will have obtained an extensive record of the nature and behavior of the Martian surface, atmosphere and interior. Such a record will aid in planning more specialized explorations that might involve robots, scientific stations deployed to the Martian surface, sample return missions and perhaps even human landings. Just as importantly, this record will help scientists understand planet Earth and what the future might have in store for humanity.

Mission operations. Throughout the two years of Mars Global Surveyor's mapping mission, principal investigators, team leaders and interdisciplinary scientists will have science operations planning computers at their home institutions. All will be electronically connected to the project database at the Jet Propulsion Laboratory in Pasadena, CA, giving them direct involvement in mission operations.

Their computers will be equipped with software that allows the science teams to remotely initiate most of the commands required by their instruments to conduct desired experiments. The teams will be able to access raw science data within hours of their receipt on Earth. This automated operation will provide "quick-look" science data and let investigators easily monitor the health and performance of their instruments. Many images and other data will be immediately available to the public on the Internet.

After a period of data validation, science data, both raw and processed, along with supplementary processing information and documentation, will be transferred to NASA's Planetary Data System archive for access and use by the broader planetary science community and the general public.

Aerobraking From Capture Orbit to Mapping Orbit Altitude Takes About 130 Earth Days

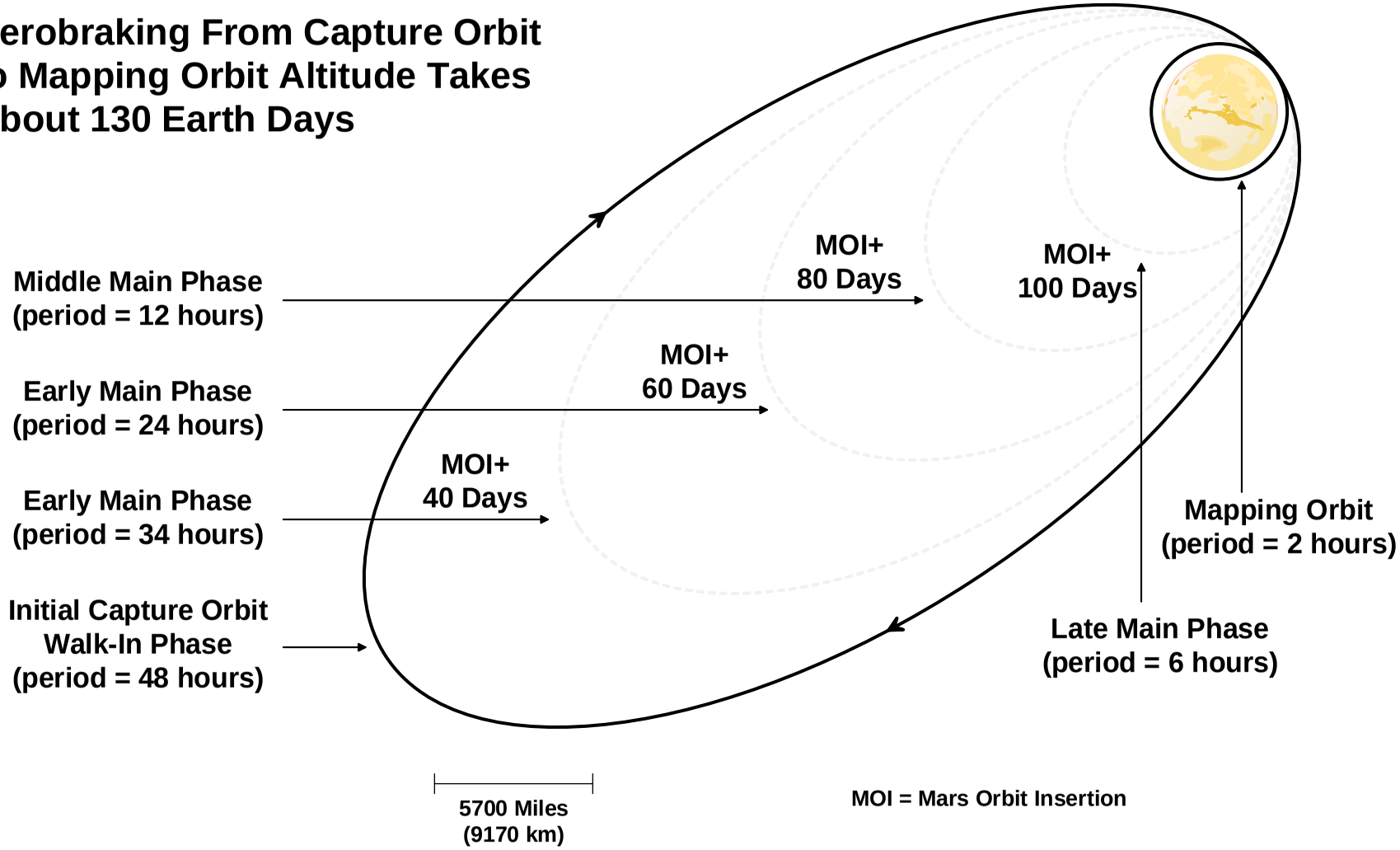

Mars Global Surveyor aerobraking orbits

Control and operation of Mars Global Surveyor will be performed by a team of engineers located at JPL and at the Lockheed Martin Astronautics Inc. in Denver, CO. Engineers in Denver will be electronically linked to JPL, providing monitoring and analysis of Mars Global Surveyor based on telemetry received from the spacecraft through NASA's Deep Space Network. The team will also develop the sequence of commands that will be sent to the spacecraft via the Deep Space Network. The electronic networking eliminates the costs of relocating mission operations team members during the mission.

Spacecraft

The core of the Mars Global Surveyor spacecraft is a rectangular body, or bus, that houses computers, the radio system, solid-state data recorders, fuel tanks and other equipment. Attached to the outside of the bus are several rocket thrusters, which will be fired to adjust the spacecraft's path during the cruise to Mars and to modify the spacecraft's orbit around the planet. At launch, the spacecraft weighs 2,337 pounds (1,060 kilograms), including the science payload and fuel. Mars Global Surveyor stands about 3 meters (10 feet) tall. The bus or main body of the spacecraft measures 5 by 5 feet (1.5 by 1.5 meters) and is 40 feet (12 meters) across from tip to tip when the solar panels are fully unfolded. The high-gain antenna, to be deployed later in the cruise phase, will measure 10 feet (3 meters) in height. The high-gain antenna will be deployed on a 6-1/2-foot-long (2-meter) boom.

To minimize costs, most of the spacecraft's electronics and science instruments are spare units left over from the Mars Observer mission. The spacecraft design also incorporates new hardware — the radio transmitters, solid state recorders, propulsion system and composite material bus structure.

Mars Global Surveyor will orbit the planet so that one side of the bus, called the nadir deck, always faces the Martian surface. Of the six science instruments, four — the Mars Orbiter Camera, the Mars Orbiter Laser Altimeter, the Electron Reflectometer and the Thermal Emission Spectrometer — are attached to the nadir deck, along with the Mars relay radio system. The magnetometer sensors are mounted on the ends of the solar arrays.

The bus has two solar-array wings and a boom-mounted high-gain communications antenna. The solar arrays, which will always point toward the Sun, provide 980 watts of electricity for operating the spacecraft's electronic equipment and for charging nickel hydrogen batteries. The batteries will provide electricity when the spacecraft is mapping the dark side of Mars.

The dish-shaped high-gain antenna is mounted on the end of a boom so that its view of Earth will not be blocked by the solar arrays as the spacecraft orbits Mars. Measuring 5 feet (1.5 meters) in diameter, this steerable antenna will be pointed toward Earth even though the spacecraft's position will be continuously adjusted during mapping to keep the nadir deck pointed toward Mars.

The spacecraft's radio system, including the high-gain antenna, also will function as a science instrument. Researchers will use it in conjunction with NASA's Deep Space Network ground stations for the radio science investigations.

To maintain appropriate operating temperatures, most of the outer exposed parts of the spacecraft, including the science instruments, are wrapped in thermal blankets.

Science Objectives

Mars Global Surveyor is designed to provide a detailed, global map of Mars that will allow scientists to study its geology, climate and interior. Key science objectives are to:

- ❑ Characterize the surface features and geological processes on Mars.
- ❑ Determine the composition, distribution and physical properties of surface minerals, rocks and ice.
- ❑ Determine the global topography, planet shape and gravitational field.
- ❑ Establish the nature of the magnetic field and map the crustal remnant field. (A crustal remnant field is evidence of magnetism that is detected within the planet's crust or rocks, produced by the planet's own magnetic field at the time of formation.)
- ❑ Monitor global weather and the thermal structure of the atmosphere.
- ❑ Study interactions between Mars' surface and the atmosphere by monitoring surface features, polar caps that expand and recede, the polar energy balance, and dust and clouds as they migrate over a seasonal cycle.

Among the multitude of scientific questions scientists wish to answer are those relating to Mars' early atmosphere and the dramatic climate changes which sent the planet into a deep freeze. All the ingredients necessary for life exist on Mars, including water, yet the surface of Mars is totally dry and probably devoid of life today.

Water is fundamental to the understanding of geological processes and climate change. But water cannot exist in liquid form at the low atmospheric pressures that currently prevail on the surface of Mars; it turns into water vapor or ice. Spacecraft have photographed numerous large and fine channels across the surface of Mars, with shapes and structures that indicate, almost beyond a doubt, that they were carved by running water. Where has the water gone? Only a tiny fraction is known to exist in the northern polar cap and in the atmosphere. Some of it may have escaped into space, but scientists believe that most of it should have remained on Mars. They want to know if water could be hidden in permafrost — thick layers of ice-rock — beneath the surface, just as it is trapped in the polar regions on Earth.

The origin and evolution of Mars are still a mystery. Thought to have formed 4.6 billion years ago, in much the same way as the other rocky planets of the inner solar system, Mars has two distinct hemispheres, roughly divided by the equator. The southern hemisphere is badly battered, perhaps the result of an intense bombardment by debris as the planet was forming. This part of Mars may be closest in history and age to the heavily cratered faces of the Moon and Mercury. Other regions of Mars may be widespread plains of volcanic lava, which erupted from within the planet over a long period of time. Similar eruptions spread across Earth's Moon to form the dark areas known as lunar maria, or "seas."

During the last 2 billion or 3 billion years, Mars also developed features that resemble those of Earth rather than the Moon. Geologic activity in the younger, northern hemisphere created huge, isolated volcanoes — most notably Olympus Mons and the other volcanoes along the Tharsis uplift — as the interior of Mars melted and lava rose to the surface. A huge canyon just below the Martian equator, called Vallis Marineris, would dwarf Earth's Grand Canyon, stretching 3,100 miles (5,000 kilometers) across the planet's surface. Many sinuous channels, apparently cut by running water that may have flooded regions of Mars hundreds of millions of years ago, also appear in the northern hemisphere.

Science Experiments

Mars Global Surveyor will carry a complement of six scientific instruments which have been furnished by NASA centers as well as universities and industry. They are:

- ❑ **Thermal Emission Spectrometer.** This instrument will analyze infrared radiation from the surface. From these measurements, scientists can determine several important properties of the rocks and soils that make up the Martian surface: how hot and cold they get during the cycles of night and day; how well they transmit heat; the distribution of rock and grain sizes; and the amount of the surface covered by large rocks and boulders. Scientists will also be able to identify minerals in solid rocks and sand dunes, which will be key to understanding how Martian bedrock has weathered over millions of years and how it might be weathering today. The instrument can also provide information about the Martian atmosphere, especially the locations and nature of short-lived clouds and dust. Principal Investigator is Dr. Philip Christensen, Arizona State University.

- ❑ **Mars Orbiter Laser Altimeter.** This experiment will measure the height of Martian surface features. A laser will fire pulses of infrared light 10 times each second, striking a 525-foot (160-meter) area on the surface. By measuring the length of time it takes for the light to return to the spacecraft, scientists can determine the distance to the planet's surface. Data from this instrument will give scientists elevation maps precise to within 100 feet (30 meters) from which they will be able to construct a detailed topographic map of the Martian landscape. Principal Investigator is Dr. David Smith, NASA Goddard Space Flight Center.

- ❑ **Magnetometer/Electron Reflectometer.** The magnetometer/electron reflectometer will search for evidence of a planetary magnetic field and measure its strength, if it exists.

These measurements will provide critical tests for current speculation about the early history and evolution of the planet. The instrument will also scan the surface to detect remnants of an ancient magnetic field, providing clues to the Martian past when the magnetic field may have been stronger due to the planet's higher internal temperature. Principal Investigator is Dr. Mario Acuna, NASA Goddard Space Flight Center.

❑ **Radio Science.** The radio science investigation will use data provided by the spacecraft's telecommunications system, high-gain antenna and an onboard ultra-stable oscillator, which is like an ultra precise clock, to map variations in the gravity field by noting where the spacecraft speeds up and slows down in its passage around Mars. From these observations, a precise map of the gravity field can be constructed and related to the structure of the planet. In addition, scientists will study how radio waves are distorted as they pass through Mars' atmosphere in order to measure the atmosphere's temperature and pressure. Principal Investigator for the radio science team is Dr. G. Leonard Tyler, Stanford University.

❑ **Mars Orbiter Camera.** Unlike cameras on spacecraft such as Galileo or Voyager, which take conventional, snapshot-type exposures, the Mars orbiter camera uses a "push-broom" technique that builds up a long, ribbon-like image as the spacecraft passes over the planet. The camera will provide low-resolution global coverage of the planet every day, collecting images through red and blue filters. It will also obtain medium- and high-resolution images of selected areas. The wide-angle lens is ideal for accumulating a weather map of Mars each day, showing surface features and clouds at a resolution of about 4.6 miles (7.5 kilometers). These global views will be similar to the types of views obtained by weather satellites orbiting the Earth. The narrow-angle lens will image small areas of the surface at a resolution of 6.5 to 9.5 feet (2 to 3 meters). These pictures will be sharp enough to show small geologic features such as boulders and sand dunes — perhaps even the now-silent Viking landers — and may also be used to select landing sites for future missions. Principal Investigator is Dr. Michael Malin, Malin Space Science Systems Inc., San Diego, CA.

❑ **Mars Relay System.** Mars Global Surveyor carries a radio receiver/transmitter supplied by the French space agency, Centre National d'Etudes Spatiales, which will support the Russian Mars '96 mission. The relay system will periodically receive and relay data from instrument packages deployed to the Martian surface by the Russian Mars '96 orbiter, which will be working in parallel to receive and relay additional data from the instrument packages. Data relayed from the surface to Mars Global Surveyor will be stored in the large solid-state memory of the orbiter's camera, where it will be processed for return to Earth. This collaborative effort will maximize data collection. Following support of the Mars '96 mission, the Mars relay system is expected to provide multiple years of in-orbit communications relay capability for future international Mars missions. Principal Investigator is Dr. Josette Runavot, Centre National d'Etudes Spatiales, France.

Mars Pathfinder

Mars Pathfinder will send a lander and small robotic rover, Sojourner, to the surface of Mars. The primary objective of the mission is to demonstrate a low-cost way of delivering a science package to the surface of the red planet using a direct entry, descent and landing with the aid of small rocket engines, a parachute, airbags and other techniques. Landers and free-ranging rovers of the future will share the heritage of Mars Pathfinder designs and technologies first tested in this mission. In addition, Pathfinder will study ancient rocks to understand the nature of the early environment on Mars and the processes that have led to features that exist today.

Mission Overview

Launch. Mars Pathfinder will be launched atop a Delta II 7925 expendable launch vehicle from launch complex 17B at Cape Canaveral, Florida, during the launch period of December 2-31, 1996. The launch window on December 2 opens at 2:09 a.m. EST and becomes progressively earlier by several minutes each day thereafter.

The first-stage engine of the Delta II and six of its nine solid boosters will be ignited at liftoff. The remaining three boosters will be fired when the first six burn out approximately 67 seconds after launch. Those three boosters will be ejected when the spacecraft is about 33 miles (54 kilometers) above Earth's surface. Main engine cutoff will occur next at an altitude of about 73 miles (118 kilometers).

Second-stage ignition will take place about 2.5 minutes later, with ejection of the fairing, or nosecone-like shell covering the payload, following eight seconds later. When the spacecraft reaches an altitude of about 117 miles (189 kilometers) above Earth, its second-stage engine will be turned off for the first time, approximately 9 minutes, 20 seconds after launch. Second-stage engine cutoff marks the end of the booster phase.

The craft will coast for nearly an hour to reach the proper orbital position from which to embark on its trajectory toward Mars. During this long coasting phase, two major spacecraft events will occur. Spinning at a rate of approximately 1 degree per second, the vehicle will first reposition itself so that its axis of rotation is perpendicular to the Sun. This attitude adjustment – called a "barbecue roll maneuver" -- will protect the spacecraft from uneven solar heating.

A maneuver will be performed next to place the second stage into the correct orientation before it is fired a second time to provide enough energy for the injection burn. At the end of this burn, the spacecraft will be in a highly elliptical orbit of about 117 by 1,840 miles (173 by 2,974 kilometers) around Earth. Then the PAM-D upper stage will be spun up to about 70 rpm using a set of spin rockets. The spacecraft and PAM-D will separate from the second stage shortly thereafter.

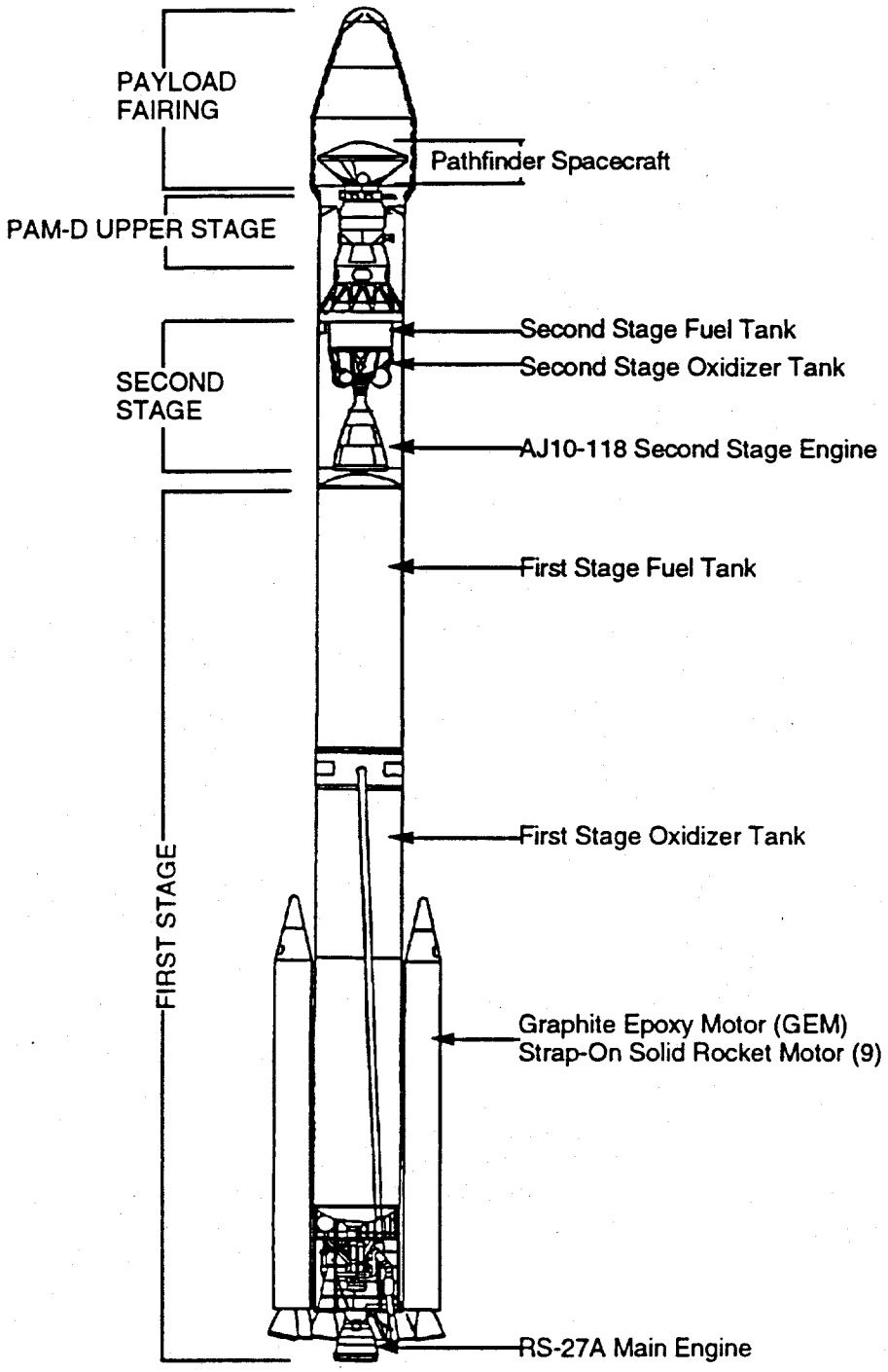

Mars Pathfinder's launch vehicle

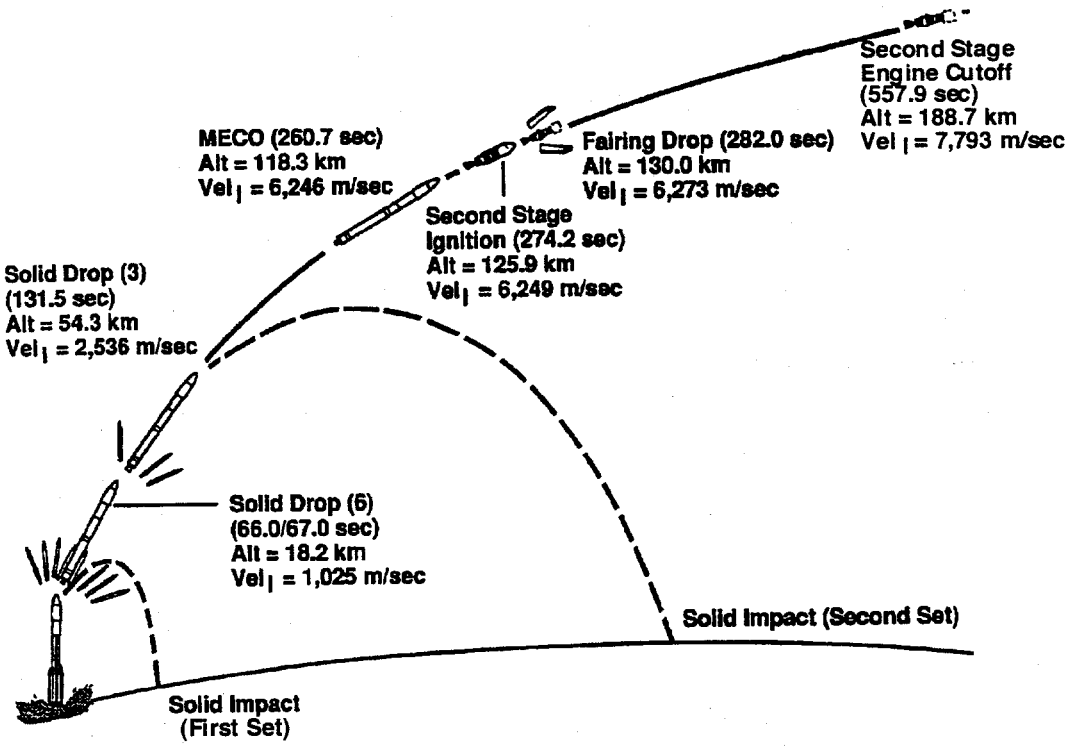

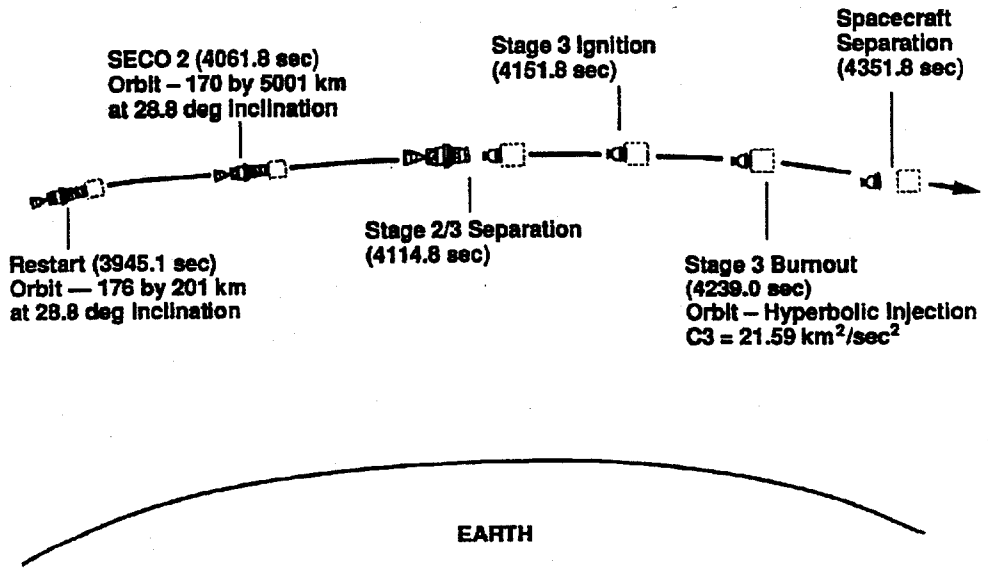

Mars Pathfinder launch phases

About 70 minutes after launch, the PAM-D will fire its engine again to prepare for third-stage separation. While Mars Pathfinder is still attached to the PAM-D, a yo-yo cable device will be deployed to slow down the spacecraft's spin rate from 70 rpm to 12 rpm, plus or minus 2 rpm. Once the correct spin-down rate has been achieved, about two to five minutes later, the spacecraft will separate from the PAM-D booster. NASA's Deep Space Network 112-foot (34-meter) antenna at Goldstone, CA, will acquire Pathfinder's X-band signal.

Near-Earth activities. The near-Earth phase of cruise begins when Mars Pathfinder separates from the PAM-D upper stage, and ends one day after execution of the first of four trajectory correction maneuvers.

The spacecraft will pass through Earth's shadow immediately after separation. The length of this shadow varies from 22 to 25 minutes depending on the actual launch date. The spacecraft's sun sensor will lock onto the Sun once the spacecraft exits the shadow. The sensor will calculate the angle of the Sun with respect to the spacecraft and provide that information to the flight computer.

The spacecraft enters a fairly quiet state after Sun acquisition and performance of health and status assessments. A two-way communications link will be established to allow navigation tracking and uplink capabilities. In addition, a brief health check of the instruments and the stowed rover will be performed during this period.

About 30 hours after launch, the spacecraft will begin to spin down. During this time, Pathfinder will be asked to determine its orientation in space by locating specific stars and then adjusting its position to be in a direct line of sight. Spin-down will be performed in a series of steps, with the spacecraft assuming various intermediate rates before achieving the desired 1.9 rpm cruise rate. Real-time commands will be used to accomplish these incremental de-spin maneuvers.

After the spacecraft's orientation in space is determined, the flight team will begin a two-week period checking out and calibrating subsystems including the solar array, battery, thermal control functions, attitude and control functions, and radio frequency subsystem. During the remainder of the near-Earth phase, the spacecraft's chief activities include collecting and transmitting engineering data, carrying out initial spacecraft health checks and calibrations, and thruster firings to maintain the correct Earth-Sun geometry.

The first trajectory correction maneuver, the largest of the four thruster firings, will occur 30 days after launch. The Deep Space Network will provide continuous coverage of all trajectory maneuvers.

Earth-Mars cruise. The Earth-Mars transfer phase begins one day after completion of the first trajectory correction maneuver and ends 45 days before Mars arrival. After the trajectory maneuver, Deep Space Network coverage will be reduced to three 4- to 8-hour passes per week, with the spacecraft transmitting data at 40 bits per second. Coverage by ground stations will be increased just before the second and third trajectory correction maneuvers.

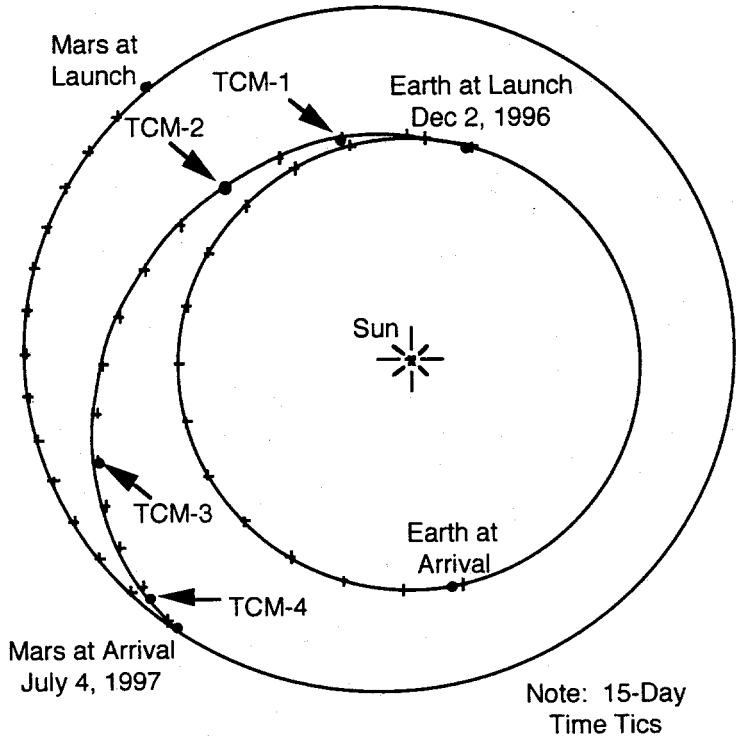

Mars Pathfinder's Earth-Mars trajectory

The second trajectory maneuver will take place 60 days after launch to correct further launch vehicle injection errors. This maneuver may be moved depending on the actual launch date to avoid Deep Space Network coverage conflicts with Mars Global Surveyor. The third trajectory correction maneuver will be performed 60 days before Mars arrival, or about five months (150 days) after launch.

Communications during trajectory maneuvers is provided through the spacecraft's medium-gain antenna. Deep Space Network tracking will be required for eight hours daily for three days prior to and after each maneuver. Tracking is required continuously for the 24-hour period centered around each maneuver.

No science operations will take place during this time. Ground operations will include analysis of spacecraft subsystems, maintenance, periodic calibrations of key spacecraft functions, and planning of trajectory correction maneuvers. Additional ground activities will include flight team operational readiness tests to prepare for entry, landing and descent, and surface operations.

Mars approach. The Mars approach phase begins 45 days before entry and ends 12 hours prior to entry. This phase is focused on a continuation of cruise activities and preparation for entry, landing and descent. The spacecraft will continue in a 2 rpm spin-stabilized mode with the spin axis oriented toward Earth. Continuous coverage by the Deep Space Network is

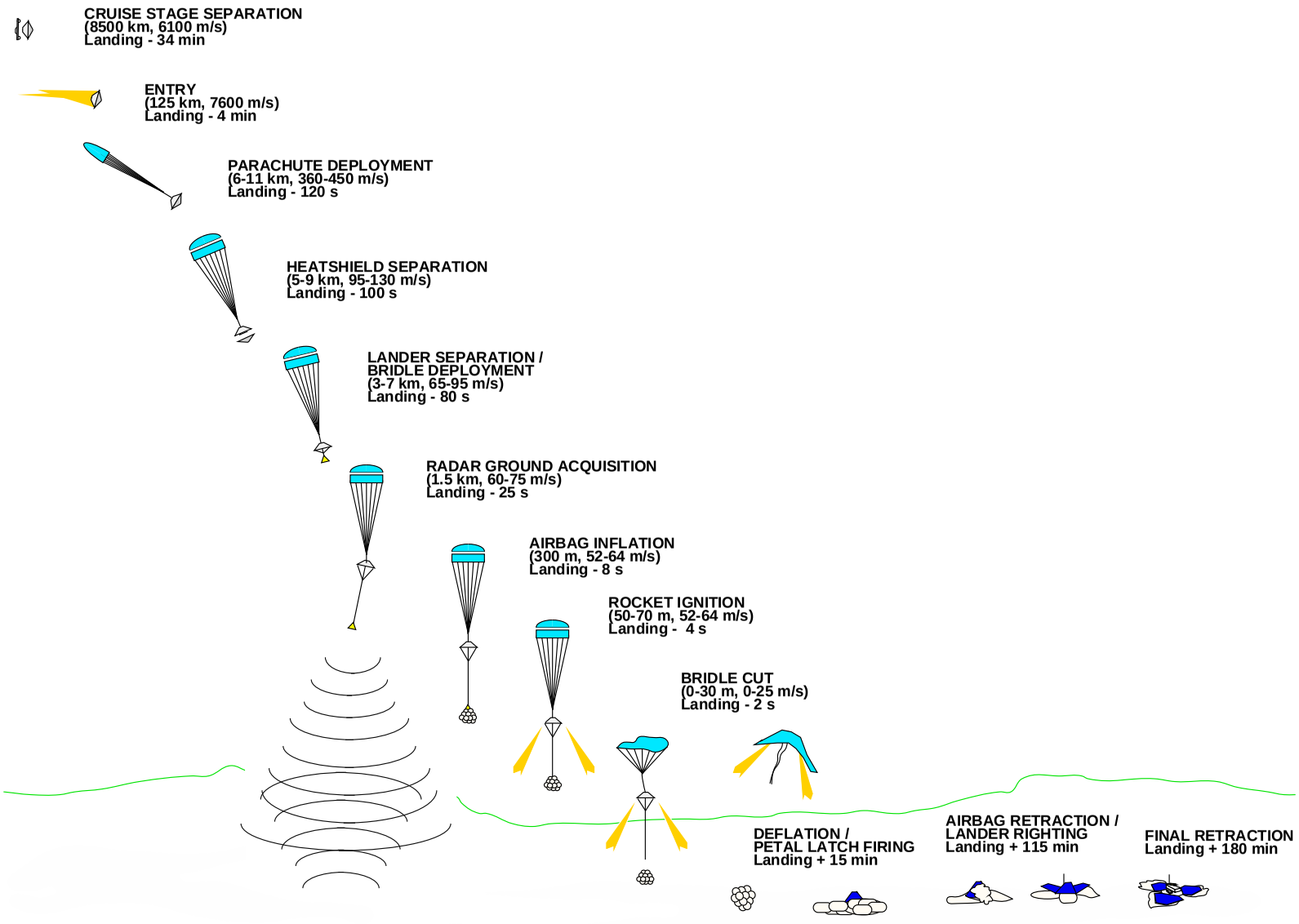

Mars Pathfinder entry, descent and landing

required during this phase to support planning and execution of the fourth and final trajectory correction maneuver, and for final entry preparations.

A final health and status check of the instruments and rover will be performed at 15 days before Mars entry. The fourth trajectory maneuver will be performed 10 days before Mars entry to ensure that landing occurs within the defined 180- by 60-mile (300- by 100-kilometer) ellipse on the Martian surface.

At six days before Mars entry, the spacecraft will turn about 7 degrees to orient itself for entry. At five days before Mars entry, a command will be issued to the spacecraft to enter a computer mode called the entry, descent, landing control mode. In this mode, the spacecraft will autonomously control many activities as it enters Mars' atmosphere, descends and lands.

After the spacecraft enters this mode, the spacecraft will power on the accelerometer and the atmospheric structure instrument, and will charge the lander's battery.

Entry, descent and landing. The entry, descent and landing phase begins 12 hours prior to Mars arrival and ends when the lander petals are fully deployed. Key activities during this phase include cruise stage separation, entry, parachute deployment, radar altimeter operations, airbag inflation, rocket-assisted deceleration burns, impact, airbag retraction and petal deployment. Real-time communications with the flight system will be possible through impact and, possibly until the lander petals are deployed, depending on the landing orientation.

The entry trajectory for Mars Pathfinder is a ballistic, direct entry with an initial velocity of 17,000 miles per hour (7.6 kilometers per second) and a mean flight path angle of 14.2 degrees. The entry velocity is approximately 80 percent faster than that of the Viking landers in the 1970s; the Vikings descended from Martian orbit, whereas Pathfinder will enter the atmosphere directly from its interplanetary trajectory.

The peak aerodynamic deceleration during entry is about 20 G's and occurs 70 seconds after entry. A parachute will be deployed between 135 and 190 seconds after entry, at an altitude of between about 4 and 6 miles (6 to 10 kilometers). Once the parachute is deployed, the flight path angle begins to bend over until the vehicle is descending nearly vertically. Landing will occur between 225 and 330 seconds after entry. This dispersion is caused by altitude uncertainties at the landing site and navigation targeting errors.

Descent begins with deployment of Mars Pathfinder's parachute and will end when the spacecraft rolls to a stop on the surface of Mars. The parachute will be deployed by firing a mortar to push the chute out of its canister. The heat shield will be released by a timer signal 20 seconds after parachute deployment to provide sufficient time for the chute to inflate and stabilize. The lander will be released from the backshell on a 65-foot (20-meter) bridle 20 seconds after heat shield release. This separation distance will increase stability during the solid rocket firing.

The radar altimeter will begin acquiring data at an altitude of about 5 feet (1.5 kilometers) above the surface. The spacecraft's airbags will inflate two seconds prior to ignition of the rocket-assisted deceleration rockets, and the rockets will fire 1 to 6 seconds before impact. The total burn time of the rockets is approximately 2.2 seconds, but the bridle is cut prior to the end of the burn to allow enough extra thrust to carry the backshell and parachute away from the lander. This will prevent the backshell and parachute from falling onto the spacecraft. The lander will then free-fall the remaining distance to the ground.

The lander could hit the ground in almost any orientation as a result of the rocket burn and bridle cut. At impact, the lander will bounce, roll and tumble until all impact energy dissipates. The interval between initial impact and the spacecraft's complete halt could be as long as several minutes. The airbags completely enclose the lander, so subsequent bounces should not result in high deceleration. Each face of the spacecraft's tetrahedron has a single six-lobed airbag, and energy is dissipated through vents in between the lobes.

Post-landing. After the lander comes to a complete stop, the next key activities are deflation and retraction of the airbags, and opening of the spacecraft's petals. Airbag deflation may begin to occur almost immediately after landing due to leaks in the bags. Each of the airbags has deflation patches which will be opened to speed up the process. These rip patches are opened by Kevlar cords inside the bags which are connected to a retraction motor. Additional cords are attached to other points inside each bag so that the airbags can be retracted after landing.

Flight software will control how the airbags are retracted. In general, the three airbags on the sides facing away from the ground will be retracted first. Once those bags have been retracted, the petals will be partially deployed so that the lander stands itself right side up. The final airbag on the side originally facing the ground will then be retracted before the petals are fully deployed. If the lander comes to rest on a rock, the entire lander may be tilted, but further maneuvering of the petals can be performed during surface operations to lower the overall tilt of the lander.

Telecommunications during entry should provide significant information about the behavior of the entry, descent and landing subsystem. Key data to be transmitted to Earth include accelerometer measurements and selected atmospheric structure instrument measurements. The Deep Space Network's 230-foot (70-meter) antenna in Madrid, Spain, will be used to support entry communications.

Prime mission. Mars Pathfinder's primary mission will begin when its lander petals have been fully unfolded and the lander switches to a sequence of computer commands that will control its functions. The spacecraft will land about four hours before sunrise on Mars and will spend the time in darkness retracting its airbags, standing itself upright and opening the petals so that solar panels can be powered up with the first light of sunrise.

The lander's first task will be to transmit engineering and science data collected during its descent through the thin atmosphere of Mars. If no errors are detected in these data, a real-time

command will be sent from Earth instructing the lander to unlock the imager camera head, deploy and point the high-gain antenna on its pop-up mast, roll out two rover exit ramps and unlatch the 22-pound (10-kilogram) rover.

Next, the lander's camera will take a panoramic image of the Martian landscape and begin transmitting the data directly to Earth at a few thousand bits per second. The first images of the Martian landscape, which will be returned to Earth within 35 minutes of the start of the primary mission, will show engineers whether the petal on which the rover sits is flat against the surface or tilted against a rock. The image will also show the terrain beyond both rover exit ramps so that engineers may decide which route looks safer.

Once a decision on the route has been made, commands will be sent to deploy the rover. Sojourner will spend about an hour exiting its ramp.

Driving off onto the floor of an old outflow channel, Sojourner will explore the surface at the command of Earth-based operators, who will rely on lander-based images to select a path and target for the rover. The six-wheeled Sojourner travels at 0.4 inch (1 centimeter) per second, performing mobility tests, imaging its surroundings and deploying an alpha proton x-ray spectrometer designed to study the elemental composition of rocks. Altogether, the rover will range a few tens of yards (or meters) from the lander.

Also mounted on the lander are wind sensors, wind socks and high- and low-gain antennas. Instruments will be used to measure pressure, temperature and density of the Martian atmosphere. Magnets mounted on the lander will collect magnetic specimens of Martian dust and soil as small as 100 microns.

Much of the lander's mission after this will be focused on supporting the rover with imaging, telecommunications and data storage.

Extended missions. The primary mission lasts seven Martian days, or "sols," for the rover, and 30 Martian days, or "sols," for the lander. The rover could carry out an extended mission beyond that period, depending on how long its power sources and electronics last; engineers expect that the most probable reason for it to stop functioning is hot-cold cycling of its onboard electronics. For the lander an extended mission lasting up to one year after landing is possible.

Lander activities in the extended mission would include continued use of the lander camera to obtain images of the terrain and atmosphere, collection of key engineering telemetry and continued collection of meteorology data.

Sojourner's extended mission activities would include repeating soil mechanics experiments on various soils; additional spectrometer measurements of both rocks and soil; obtaining images of selected areas with the rover camera, including close-ups of any damage to the lander; obtaining images of the lander's landing and tumbling path; and traveling longer distances, with the possibility of going over the horizon.

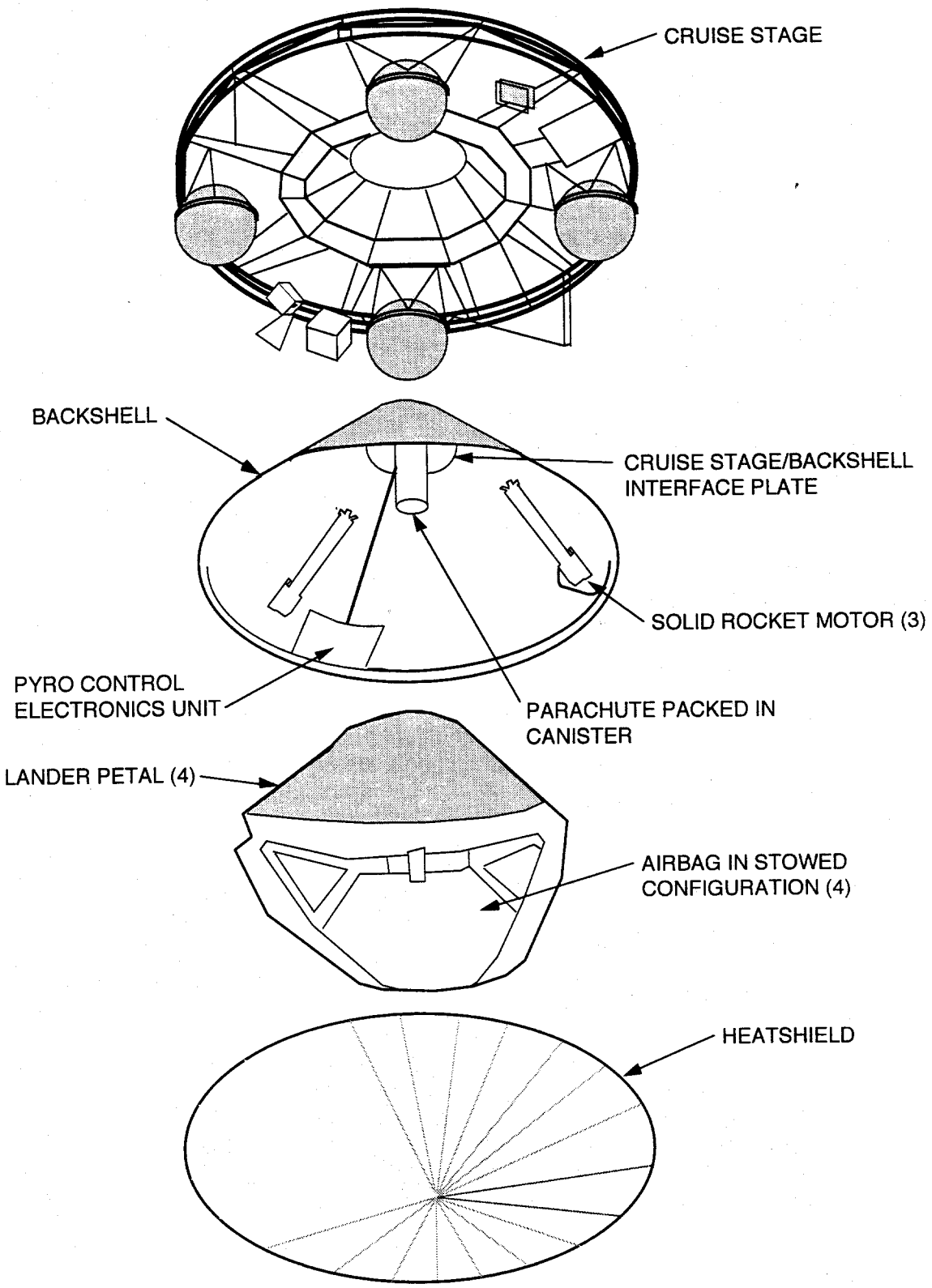

Mars Pathfinder flight system

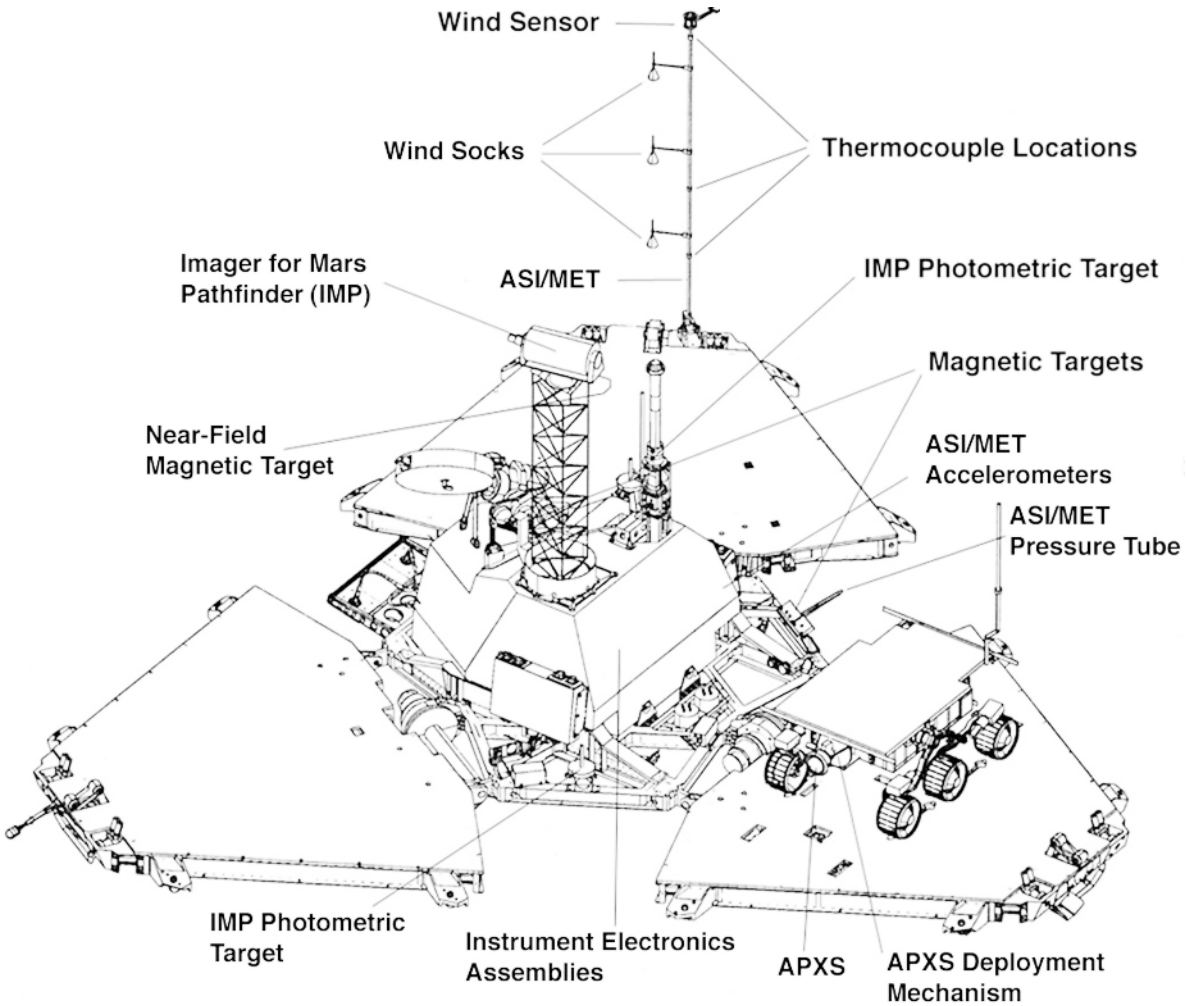

Mars Pathfinder lander

Mission operations. All operations for Mars Pathfinder will be conducted at JPL, where the science teams reside. Science data, both raw and processed, will be transferred after a period of validation to NASA's Planetary Data System archive for access and use by the planetary community at large and the general public.

Spacecraft

At launch the Mars Pathfinder spacecraft will weigh about 1,962 pounds (890 kilograms), including its cruise stage, aeroshell and backshell, solar panels, propulsion stage, medium- and- high-gain antennas and 220 pounds (100 kilograms) of cruise propellant. The cruise stage measures 8.5 feet (2.65 meters) in diameter and stands 5 feet (1.5 meters) tall. The lander resembles a tetrahedron, a small pyramid standing about 3 feet (0.9 meter) tall with three triangular-shaped sides and a base.

When Pathfinder is poised to enter the Martian atmosphere, its main components will be the aeroshell, folded lander and rover, parachute, airbag system and small rocket engines. Combined, the spacecraft will weigh approximately 1,256 pounds (570 kilograms) at entry.

Once it has landed and its airbags have been deflated, Pathfinder will then weigh about 793 pounds (360 kilograms). Subsystems contributing to its landed weight include the opening/uprighting mechanism, lander cabling and electronics, instruments and rover. When it is unfolded and lying flat on the surface, the spacecraft will measure 9 feet (2.75 meters) across and sport a mast-mounted camera poking up about 5 feet (1.5 meters) from the ground.

The lander is controlled by a commercially available control computer, the IBM RAD 6000, which is a radiation-hardened, single-board computer related to the PowerPC. The computer has a 32-bit architecture which executes more than 22 million instructions per second. The computer will store flight software as well as engineering and science data, including images and rover information, in 128 megabytes of available memory.

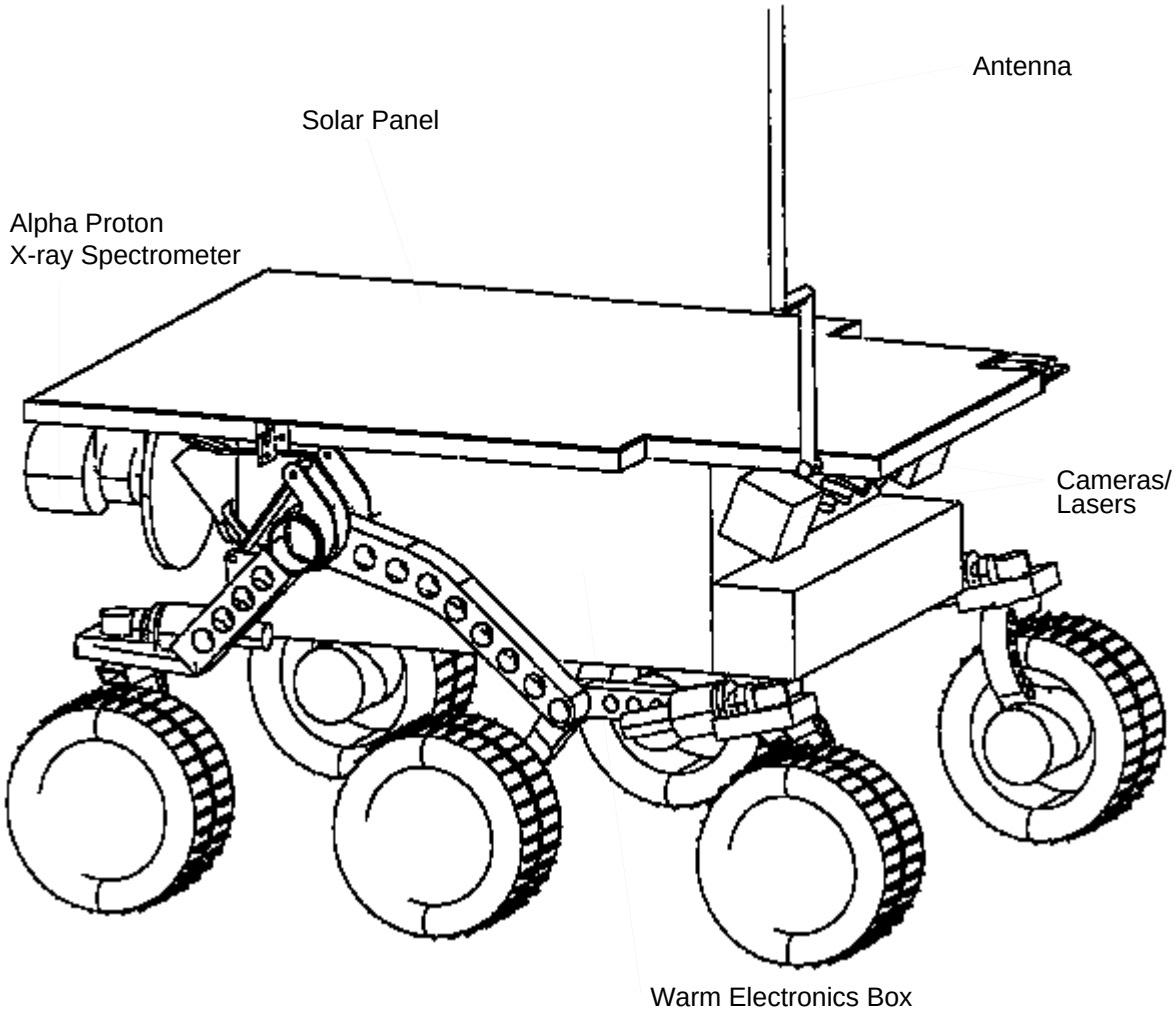

Mars Pathfinder's Sojourner rover

During interplanetary cruise, the spacecraft requires 178 watts of electrical power, provided by 27 square feet (2.5 square meters) of gallium arsenide solar cells. On the Martian surface, more solar cells will be exposed to the Sun than during cruise and, with batteries, will provide 850 watt-hours on clear days and half that amount of power on days when the Sun is obscured by dust.

The lander has three solar panels, each with an area of 35.5 square feet (3.3 square meters) and supplying 100 watt-hours of power per day. At night, the lander will operate on rechargeable silver zinc batteries with 40 amp hours.

The Pathfinder lander carries a camera on a mast to survey its immediate surroundings. The camera has two optical paths for stereo imaging, each with a filter wheel giving 12 spectral bands in the 0.35 to 1.1 micron range. Its field-of-view is 14 degrees in both horizontal and vertical directions, and it will be able to take one frame (256 by 256 pixels) every two seconds.

Sojourner rover. Sojourner, the small rover onboard Mars Pathfinder, was named after an African American reformist, Sojourner Truth, who lived during the tumultuous era of the American Civil War and made it her mission to “travel up and down the land” advocating the rights of all people to be free. The name was chosen by a panel of judges from the Jet Propulsion Laboratory and the Planetary Society following a year-long, worldwide competition in which students up to 18 years old were invited to select heroines and submit essays about their historical accomplishments. Sojourner Truth was shortened to Sojourner because it means “traveler.”

Sojourner with its mounting and deployment equipment weighs about 38.5 pounds (17.5 kilograms) at launch. Once it is mobile and operating on the Martian surface, it will weigh a mere 22 pounds (10 kilograms). The vehicle travels 0.4 inch (1 centimeter) per second and is about 2 feet (65 centimeters) long by 1.5 feet (48 centimeters) wide by 1 foot (30 centimeters) tall. During the cruise to Mars, it will be folded in its stowage space and measure only 7 inches (18 centimeters) tall.

Equipped with three cameras — a forward stereo system and rear color imaging system — the Sojourner rover will take several images of the lander to assess the lander’s health.

Sojourner is powered by a 1.9-square-foot (0.2-square-meter) solar array, sufficient to power the rover for several hours per day, even in the worst dust storms. As a backup and augmentation, lithium sodium dioxide D-cell batteries are enclosed in the rover’s thermally protected warm electronics box. Thermal protection is provided by a nearly weightless material called silica aerogel. Three radioisotope heater units (RHUs) -- each about the size of a flashlight battery -- contain small amounts of plutonium-238 which gives off heat to keep the rover’s electronics warm.

The rover’s wheels and suspension use a rocker-bogie system that is unique in that it does not use springs. Rather, its joints bend and conform to the contour of the ground, provid-

ing the greatest degree of stability for traversing rocky, uneven surfaces. A six-wheel chassis was chosen over a four-wheel design because it provides greater stability. For instance, one side of Sojourner could tip as much as 60 degrees as it climbed over a rock without tipping over. The wheels are 5 inches (13 centimeters) in diameter and made of stainless steel foil. Cleats on the wheels provide traction and each wheel can move up and down independently of all the others. Three motion sensors along Sojourner's frame can detect excessive tilt and stop the rover before it gets dangerously close to tipping over. Sojourner is capable of scaling a boulder on Mars that is more than 10 inches (25 centimeters) high and keep on going.

The rover will also perform a number of technology experiments designed to provide information that will improve future planetary rovers. These experiments include: terrain geometry reconstruction from lander/rover imaging; basic soil mechanics by imaging wheel tracks and wheel sinkage; and dead reckoning, path reconstruction and vision sensor performance of the rover.

In addition, Sojourner experiments will also determine vehicle performance; rover thermal conditions; effectiveness of the radio link; and material abrasion by sensing the wear on different thicknesses of paint on a rover wheel.

Scientists will study adherence of Martian crustal material by measuring dust accumulation on a reference solar cell that has a removable cover, and by directly measuring the mass of accumulated dust on a quartz crystal microbalance sensor.

The rover’s control system calls for the human operator to choose targets and for the rover to autonomously control how it reaches the targets and performs tasks. The onboard control system is built around an Intel 80C85 processor, selected for its low cost and resistance to single-event upsets from certain types of radiation. It is an 8-bit processor which runs at about 100,000 instructions per second.

Sojourner also carries an alpha proton x-ray spectrometer which must be in contact with rocks or soil to measure the chemical composition of the material being studied.

Science Objectives

Mars Pathfinder carries a suite of instruments and sensors to accomplish a focused set of science investigations. These investigations include: studying form and structure of the Martian surface and its geology; examining the elemental composition and mineralogy of surface materials; conducting a variety of atmospheric science investigations; and investigating the rotational and orbital dynamics of the planet from two-way ranging and Doppler tracking of the lander.

In the first few days of the mission, the lander’s stereo color imager will take several panoramic photographs of the Martian landscape. Scientists will use the imaging system to study Martian geologic processes and interactions between the surface and atmosphere. The imaging system will be able to observe the general physical geography, surface slopes and rock distribution of the surface so that scientists can understand the geological processes that created

and modified Mars. Panoramic stereo imaging will take place at various times of the day, as well as before and after the imager is deployed on its pop-up mast. In addition, observations over the life of the mission will reveal any changes in the scene over time that might be caused by frost, dust or redistribution of sand, erosion or other surface-atmosphere interactions.

The rover will also take closeup images of the terrain during its travels. A basic understanding of soil mechanics will be obtained by rover and lander imaging of rover wheel tracks, holes dug by rover wheels and any surface disruptions that have been caused by airbag bouncing and/or retraction.

The rover's alpha proton x-ray spectrometer will measure the elemental composition of rocks and surface soil and determine their mineralogy. These data will provide a "ground truth" for orbital remote-sensing observations being obtained overhead by Mars Global Surveyor and the Mars '96 orbiter. Results will help scientists understand more about the crust of Mars, how it evolved into different feature types, and how weathering has affected surface features.

During Pathfinder's entry and descent, an atmospheric instrument will study pressure, temperature and density of the atmosphere at various altitudes, beginning at about 75 miles (120 kilometers) above the surface and continuing all the way down to the ground. This profile will be compared with the last profiles taken 20 years ago by the two Viking landers. Wind speed and direction will be determined by a wind sensor on top of the lander mast, along with three wind socks on the mast, to reveal more information about the forces present in the Martian atmosphere which act on small surface particles and draw them to the wind.

Orbital and rotational dynamics will be studied using two-way X-band ranging and Doppler tracking of the Mars Pathfinder lander by NASA's Deep Space Network. Ranging, which is achieved by bouncing radio signals from Earth off the lander and then measuring the amount of time it takes to receive the returned signal, will provide an accurate measurement of the distance from a tracking station on Earth to Ares Vallis. After a few months of such tracking, scientists expect to know the location of the Pathfinder lander to within a few meters (yards) of accuracy.

Once the location of the lander is known, the pole of rotation of the planet can be determined. Knowledge of the orientation of Mars' pole of rotation will allow scientists to calculate the planet's precession -- gradual gyration of the planet's rotational axis over the course of many centuries that causes its north pole to point to different locations in space. Such information should validate or disprove theories about Mars' interior, such as whether the planet has a metallic core, and shed new light on the forces which cycle volatiles between the Martian atmosphere and its poles.

The Landing Site

NASA has selected an ancient flood plain on Mars as the Mars Pathfinder landing site. Called Ares Vallis, the rocky plain was the site of great floods when water flowed on Mars eons ago. The site — at 19.5 degrees north latitude, 32.8 degrees west longitude — is about 525

miles (850 kilometers) southeast of the location of Viking Lander 1, which in 1976 became the first spacecraft to land on Mars. Pathfinder will be the first craft to land on Mars since the twin Viking landers arrived more than 20 years ago. The spacecraft, scheduled to land on Mars on July 4, 1997, will parachute down to Ares Vallis at the mouth of an ancient outflow channel chosen for the variety of rock and soil samples it may present.

Some constraints on the location were the result of engineering considerations. Since the Mars Pathfinder lander and Sojourner rover are solar-powered, the best site would be one with maximum sunshine; in July, 1997, the Sun will be directly overhead at 15 degrees north Martian latitude. The location's elevation had to be as low as possible so the descent parachute would have sufficient time to open and slow the lander to the correct terminal velocity. The landing will be within a 60- by 120-mile (100- by 200-kilometer) ellipse around the targeted site due to uncertainties in navigation and atmospheric entry.

A number of potential sites were considered where ancient flood channels empty into Chryse Planitia. Among them were Oxia Palus, a dark highlands region that contains highland crust and dark wind-blown deposits; Maja Valles Fan, a delta fan which drained an outflow channel; and the Maja Highlands, just south of Maja Valles. All of the sites were studied using Viking orbiter and Earth-based radar data.

The importance of the landing site on the potential scientific return was the driving factor in the scientific community's choice of a landing site. In 1994, more than 60 scientists from the United States and Europe participated in a workshop to recommend a landing site for Pathfinder. More than 20 individual landing sites were proposed before Ares Vallis was chosen.

Ares Vallis met several general criteria. First, it was a "grab bag" location, set at the mouth of a large outflow channel in which a wide variety of rocks would be potentially within reach of the rover. Even though the exact origins of the samples would not be known, since many rocks washed onto the plain from highlands in ancient floods, the chance to sample a variety of rocks in a small area could reveal much about Mars. In addition, scientists wanted to choose a site that contained highland rocks because they make up two-thirds of the crust of Mars. With highland samples, they would be able to address questions about the early evolution of both the crust and the Martian environment. This was of particular interest to exobiologists, who are interested in beginning their search for evidence of life -- extinct or existing -- by first surveying the rock types in the highlands to find out if Mars had an early environment that was suitable for the beginnings of life.

Once the site was selected, scientists fanned out until they found a geological site very similar to Ares Vallis on Earth which they could study firsthand. In September 1995, planetary scientists traveled to the Channeled Scabland, near the cities of Spokane and Moses Lake, in central eastern Washington State to examine landforms and geologic features created by one or more giant, catastrophic floods which swept through the area as the North American continent thawed from an ice age.

The Scabland formed when waters with the volume of Lake Erie and Lake Ontario com-

bined broke through a glacial dam and flooded the region in just two weeks. The flooding carved landforms and geologic features similar to those on Mars' Ares Vallis, and created Lake Missoula, Montana. The site was an ideal Earth-based laboratory for studying landing site conditions and testing rover mobility.

Mars Pathfinder will be the first mission to characterize the rocks and soils in a landing area over hundreds of square yards (or meters) on Mars. The new information will provide a calibration point or "ground truth" for remote-sensing observations taken by orbiters that are surveying the planet's surface.

Planetary Protection Requirements

The U.S. is a signatory to the United Nation's Treaty of Principles Governing the Activities of States in the Exploration and Use of Outer Space, Including the Moon and Other Celestial Bodies. Known as the "Outer Space Treaty," this document states in part that exploration of the Moon and other celestial bodies shall be conducted "so as to avoid their harmful contamination and also adverse changes in the environment of the Earth resulting from the introduction of extraterrestrial matter."

NASA policy establishes basic procedures to prevent contamination of planetary bodies. Different requirements apply to different missions, depending on which solar system object is targeted and the spacecraft or mission type (flyby, orbiter, lander, sample-return, etc.). For some bodies such as the Sun, Moon and Mercury, there are no outbound contamination requirements. Current requirements for the outbound phase of missions to Mars, however, are particularly rigorous. Planning for planetary protection begins during pre-mission feasibility planning.

Planetary protection requirements called for Pathfinder's surfaces to contain a maximum of about 250 spores per square yard (300 spores per square meter). To meet this goal, the spacecraft was cleaned to a level consistent with the Viking spacecraft before they were sterilized. Technicians continually cleaned the spacecraft throughout development by rubbing down surfaces with an alcohol solution. Large surface areas, such as the airbags and parachute, had to be baked for about 50 hours at 230 degrees F (110 degrees C). The spacecraft will be checked constantly during processing at Kennedy Space Center and given a final planetary protection inspection just before its integration with the Delta II launch vehicle.

Science Experiments

Mars Pathfinder and its rover carry several science instruments that will image terrain in the vicinity of the landing site, explore the composition of rocks and make measurements of the Martian atmosphere. The payload of science instruments includes:

- **Imager.** The camera on the lander is a stereo imaging system with color capability provided by a set of selectable filters for each of the two camera channels. It has been developed by a team led by the University of Arizona, with contributions from the Lockheed Martin

Corp., Max Planck Institute for Aeronomy in Mainz, Germany, Technical University of Braunschweig in Germany and the Ørsted Laboratory, Niels Bohr Institute for Astronomy, Physics and Geophysics, in Copenhagen, Denmark. Principal Investigator is Dr. Peter Smith, Arizona State University, Tempe.

The imager consists of three physical subassemblies: a camera head with stereo optics, filter wheel, charge-coupled device and pre-amplifier, mechanisms and stepper motors; an extendable mast with electronic cabling; and two plug-in electronics cards which plug into slots in the warm electronics box within the lander. Full panoramas of the landing site are acquired during the mission using the stereo baseline provided by the camera optics. Multispectral images of a substantial portion of the visible surface may be acquired with as many as eight spectral bands.

A number of atmospheric investigations are carried out using imager photographs. Aerosol opacity is measured periodically by imaging the Sun through two narrow-band filters. Dust particles in the atmosphere are characterized by observing one of Mars' moons, Phobos, at night as well as the Sun during the day. Water vapor abundance is measured by imaging the Sun through filters in the water vapor absorption band and in the spectrally adjacent continuum. Images of wind socks located at several heights above the surrounding terrain are used to assess wind speed and direction.

A magnetic properties investigation is included as part of the imaging investigation. A set of magnets of differing field strengths will be mounted to a plate and attached to the lander. Images taken over the duration of the landed mission are used to determine the accumulation of magnetic species in the wind-blown dust. Multispectral images of these accumulations may be used to differentiate among likely magnetic minerals.

The imaging investigation also includes the observation of wind direction and speed using wind socks are located at various heights on a mast. The wind socks will be imaged repeatedly by the imager; orientations of the wind socks will be measured in the images to determine the wind velocity at three different heights above the surface. This information can then be used to estimate the aerodynamic roughness of the surface in the vicinity of the lander, and to determine the variation in wind speed with height. Because the Viking landers had wind sensors at only one height, such a vertical wind profile has never been measured on Mars.

This new knowledge will help to develop and modify theories for how dust and sand particles are lifted into the Martian atmosphere by winds, for example. Because erosion and deposition of wind-blown materials has been such an important geologic process on the surface of Mars, the results of the wind sock experiment will be of interest to geologists as well as atmospheric scientists.

❑ **Alpha Proton X-Ray Spectrometer.** This instrument is designed to determine the elements that make up the rocks and soil on Mars. It is a derivative of instruments flown on the Russian Vega and Phobos missions and identical to the unit planned for flight on the

Russian Mars ’96 landers. Thanks to the mobility provided by the Mars Pathfinder rover, the alpha proton x-ray spectrometer can not only take spectra measurements of the Martian dust but, more importantly, may be moved to distinct rock outcroppings, permitting analysis of the native rock composition for the first time. The alpha and proton portions are provided by the Max Planck Institute, Department of Chemistry, Mainz, Germany. The x-ray spectrometer portion is provided by the University of Chicago. Principal Investigator is Dr. Rudolph Rieder of the Max Planck Institute for Chemistry; co-investigators are Dr. Thanasis Economou of the University of Chicago and Dr. Henry Wänke of the Max Planck Institute for Chemistry.

The instrument can measure the amounts of all elements present except hydrogen, as long as they make up more than about 1/10th of 1 percent of the mass of the rock or soil.

The instrument works by bombarding a rock or soil sample with alpha particle radiation -- charged particles that are equivalent to the nucleus of a helium atom, consisting of two protons and two neutrons. The source of the particles is small pieces of the radioactive element curium-244 onboard the instrument. In some cases, the alpha particles interact with the rock or soil sample by bouncing back; in other cases, they cause x-rays or protons to be generated. The “backscattered” alpha particles, x-rays and protons that make it back into the detectors of the instrument are counted and their energies are measured. The number of particles counted at each energy level is related to the abundances of various chemical elements in the rock or soil sample, and the energies are related to the types of elements present in the sample. A high-quality analysis requires about 10 hours of instrument operation while the rover is stationary; it may be done at any time of day or night.

Most of the instrument's electronics are located on the rover in a container called the warm electronics box. Cables run from that box to the instrument sensor head, which contains the radioactive sources and particle detectors. The instrument sensor head is held by a robotic arm attached to the back of the rover. This arm has a flexible "wrist" and can place the sensor head in contact with rocks and soil at various angles depending on how rough the rocks or soils might be. Sensors on a bumper ring attached to the sensor head indicate to the rover when adequate contact has been made with the sample rock or soil. When the sensor head is in position, it analyzes an area of rock or soil within a circle 2 inches (5 centimeters) across. Additional information about the rock or soil can be obtained by taking pictures of it using a small color camera on the back of the rover, or by rotating the rover and imaging it with stereo cameras on the front of the rover.

❑ **Atmospheric Structure Instrument/Meteorology Package.** The atmospheric structure instrument and meteorology package — or ASI/MET — is an engineering subsystem which acquires atmospheric information during the descent of the lander through the atmosphere and during the entire landed mission. It is implemented by JPL as a facility experiment, taking advantage of the heritage provided by the Viking mission experiments. Dr. Alvin Seiff of San Jose State University, San Jose, CA, was the instrument definition team leader. The science team that will use the data acquired by the package will be selected before launch.

Data acquired during the entry and descent of the lander permit reconstruction of profiles of atmospheric density, temperature and pressure from altitudes in excess of about 60 miles (100 kilometers) from the surface.

The accelerometer portion of the atmospheric structure instrument depends on the attitude and information management subsystem of the lander. It consists of sensors on each of three spacecraft axes. The instrument is designed to measure accelerations over a wide variety of ranges from the micro-G accelerations experienced upon entering the atmosphere to the peak deceleration and landing events in the range of 30 to 50 G's.

The ASI/MET instrument hardware consists of a set of temperature, pressure and wind sensors and an electronics board for operating the sensors and digitizing their output signals. Temperature is measured by thin wire thermocouples mounted on a meteorological mast that is deployed after landing. One thermocouple is placed to measure atmospheric temperature during descent; three more are located to monitor atmospheric temperatures at heights of about 10, 20 and 40 inches (25, 50 and 100 centimeters) above the Martian surface after landing. Pressure is measured by a Tavis magnetic reluctance diaphragm sensor similar to that used by Viking, both during descent and after landing. The wind sensor employs six hot wire elements distributed uniformly around the top of the mast. Wind speed and direction about 40 inches (100 centimeters) above the Martian surface are derived from the temperatures of these elements.

Mars ’96

Mars ’96 is a Russian mission consisting of an orbiter with about a dozen instruments and a variety of smaller devices which will be placed in a highly elliptical, 43-hour orbit about Mars, as well as two small landers and two penetrators designed to conduct a variety of surface studies. Included in the payload are two U.S. experiments, the Mars Oxidation Experiment and the Tissue-Equivalent Proportional Counter.

The mission is the second stage of a long-term program of Martian exploration planned by Russia. The first stage of the Russian program was to study Mars from space, using spacecraft that would be placed in orbits near one of Mars’ moons, Phobos. Launched on July 7 and 12, 1988, Phobos-1 and Phobos-2 were lost during their missions. Following Mars ’96, Russian plans call for a third stage of exploration with the delivery of a lander and rover to the surface of Mars.

Mission Overview

Launch and cruise. Mars ’96 will be launched on a Russian Proton, a heavy-lift launcher comparable to the U.S. Titan 4, during a window that opens on November 12, 1996, from Baikonur Cosmodrome in Kazakstan. Although the window opens on November 12, the Russian space agency will not attempt a launch until November 16, the ideal launch day. The launch window on November 16 opens at about 11:03 p.m. Moscow time (20:03 Universal Time, or 3:03 p.m. U.S. Eastern Standard Time).

The Proton’s four stages will place the spacecraft into an orbit 102 miles (165 kilometers) above Earth inclined to the plane of the ecliptic at 51.6 degrees. At the end of the first orbit around Earth, the Proton’s fourth stage will be reignited to provide an additional boost of energy necessary to place the spacecraft into the proper trajectory to Mars. The remaining energy needed for trans-Mars injection will be provided by the Mars ’96 spacecraft’s onboard propulsion module. The spacecraft’s antennas will be deployed after the final burn of the Proton’s fourth stage and before the burn of the Mars ’96 spacecraft’s propulsion module. The solar arrays and instrument platforms will be deployed after the first trajectory correction maneuver is performed.

After a 10-month cruise, the spacecraft is scheduled to arrive at Mars on September 12, 1997. Two midcourse corrections are planned during cruise; the first will occur seven to 10 days after launch, and the second will be performed about one month before arrival at Mars. A third trajectory correction maneuver will occur in conjunction with the orbiter deflection maneuver about four or five days before Mars orbit insertion.

Small stations deployment. Five days before arrival at Mars, two “small stations” will be separated from the orbiter; the orbiter will then perform a deflection maneuver to place it on course for Mars orbit insertion. The two stations will approach Mars independently and enter

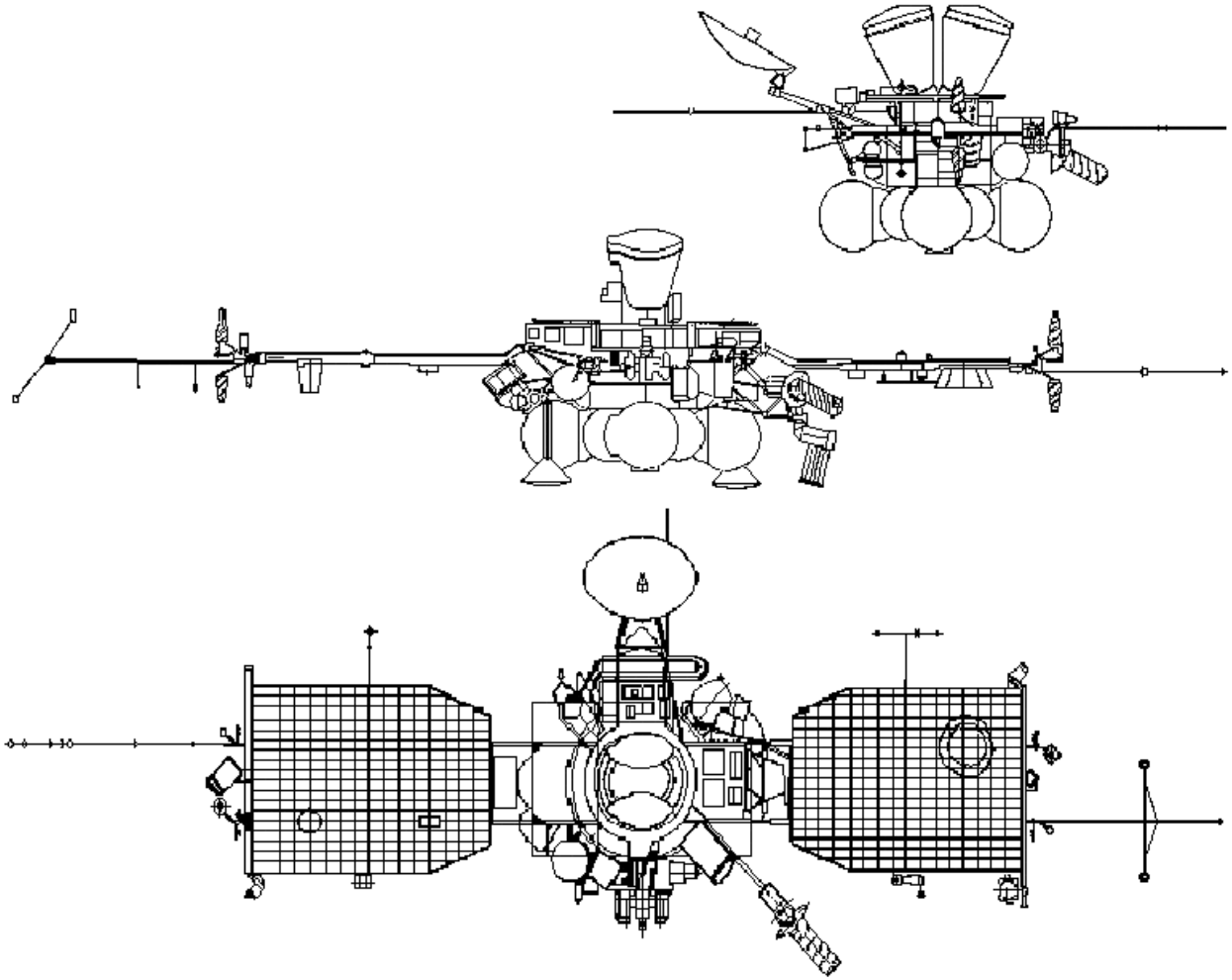

Mars ’96 orbiter (three views)

Mars' atmosphere at about 12,600 miles per hour (5.75 kilometers per second) at an angle of between 10.5 and 20.5 degrees, landing in Amazonis Planitia.

The small stations use a landing technology very similar to that of Mars Pathfinder. Each small station is first braked by an aeroshell as it passes through Mars' upper atmosphere; later, it descends on a parachute. As the small station nears Mars' surface, two airbags inflate to cushion the final impact. After some bouncing -- as much as 230 feet (70 meters) on the first bounce -- the assembly comes to a rest. Laces that hold the airbags together are released and the airbags spring apart; the lander falls about one yard (or meter) to the ground. This technology was successfully used on Earth's Moon for the first Soviet landers in the 1960s.

Mars orbit insertion. As the Mars '96 orbiter reaches periapsis, or the closest point in its orbit around Mars, its propulsion system will be automatically fired to place the orbiter into an initial orbit with a period of about 50 hours. The spacecraft will travel in an elliptical orbit of about 310 by 32,300 miles (500 by 52,000 kilometers), passing closest over Mars' northern hemisphere.

Following Mars orbit insertion, the periapsis altitude will be adjusted to 185 miles (300 kilometers). Several additional orbit maneuvers will be performed between seven days and 28 days after Mars orbit insertion to position the spacecraft for communications with Earth.

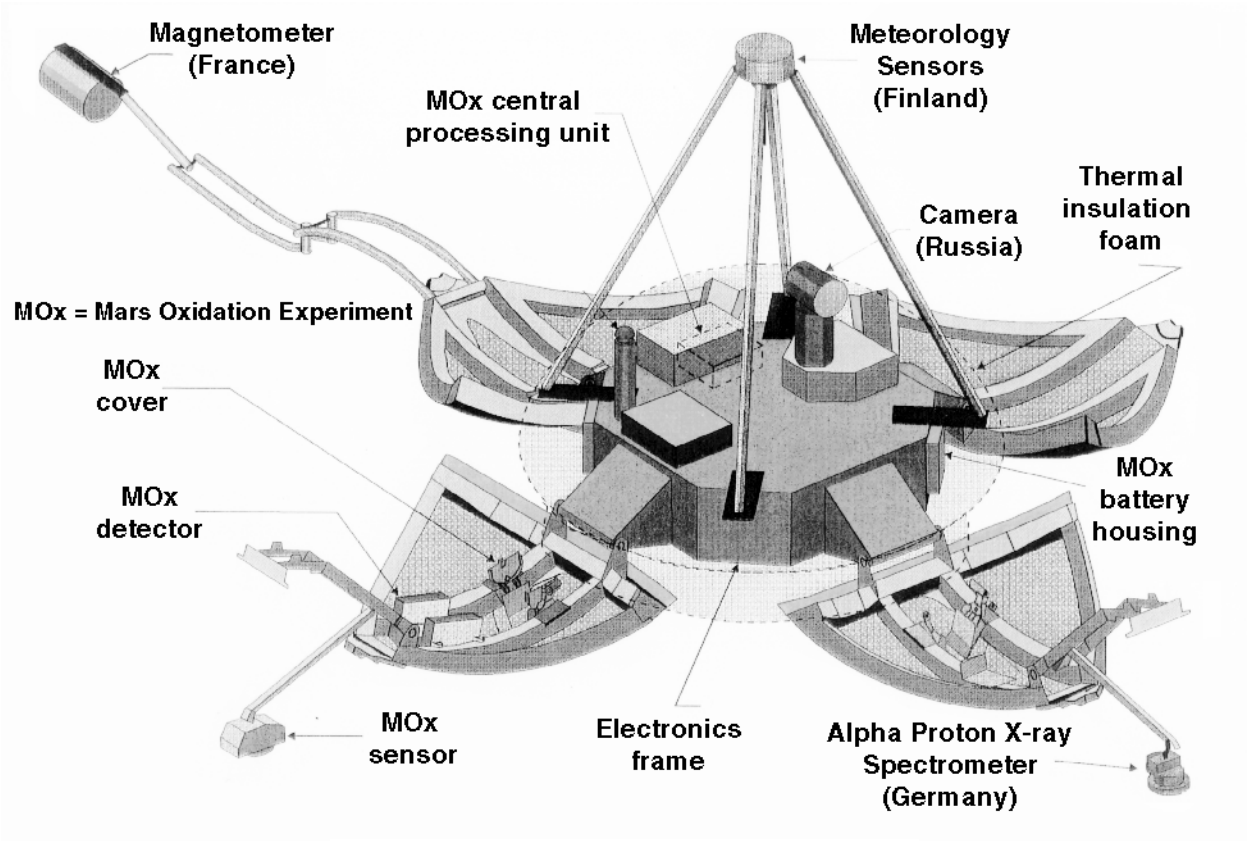

Mars '96 small station

Penetrator release. The spacecraft also carries two penetrators which will be released sometime between seven and 28 days after Mars orbit insertion. The intent is to deploy one of the penetrators close to the small stations and the other at a greater distance, at least 90 degrees longitude away. If the orbit adjustments take longer, however, or if dust storms begin to sweep over the planet, both penetrators can be deployed during the same telecommunications pass with Earth. Under these conditions, the penetrators will land less than 5 to 6 degrees apart. It is possible to deploy both penetrators on a single orbit.

During each deployment, the orbiter will first be properly oriented. The penetrator to be released will be spun about its longitudinal axis for stability, then ejected. After the penetrator moves a safe distance away from the orbiter, it will fire a solid rocket motor that will place it into an atmospheric entry trajectory. Entry will occur about 21 to 22 hours later.

Once within the Martian atmosphere, each probe undergoes aerodynamic braking, first using a rigid cone and then an air-inflated braking device, until a given velocity is reached to provide penetration into the Martian soil. The entry velocity is 10,960 miles per hour (4.9 kilometers per second) at an entry angle of about 12 degrees, plus or minus 2 degrees.

The desired landing site is within an ellipsis about 150 by 20 miles (240 by 30 kilometers). As the penetrator impacts the surface at a velocity of about 180 to 220 miles per hour (80 to 100 meters per second), the forebody will separate from the aftbody. The penetrating portion of the probe forebody, carrying scientific and housekeeping instruments, will be lodged about 3 to 20 feet (1 to 6 meters) below the surface, while the rest of the instrument remains on the surface. Data from the probes will be relayed to Earth via the orbiter.

Orbital operations. Mars ’96 orbital operations include two subphases: support for the landed packages and orbital mapping. The orbital period will be adjusted to permit relay of the lander data. The orbital period permits the orbiter to receive data from each of the landers for about 5 to 6 minutes every seven days. Minor orbit corrections will be performed once a month to maintain the communications link with the landers.

Once the penetrators have landed, the orbiter propulsion module will be jettisoned and one of the two science platforms will be deployed. After 50 to 60 days, the orbit’s periapsis will gradually shift to a portion of Mars in daylight during each pass, and the orbiter’s surface and atmospheric instruments will be used. The best lighting conditions will occur about 90 days after arrival at Mars. At this time, the orbital period will be adjusted to permit a 1 degree shift of ground tracks every four days. After this adjustment, the orbiter will not be able to view the landers for data relay. Data relay will be supported by NASA’s Mars Global Surveyor orbiter, which will store and process data for transmission back to Earth.

Tracking of the spacecraft from Russia’s Evapatoria and Ussurijsk facilities will vary from a maximum of about eight hours per day to about 6.5 hours per day two months after Mars orbit insertion. Mars ’96 will also be tracked by NASA’s Deep Space Network tracking facilities.

Spacecraft

Mars ’96 consists of an orbiter and four landers, two small, moderately soft landers and two penetrators. The orbiter is about 10 by 10 by 30 feet (3 by 3 by 9 meters) and weighs about 13,200 pounds (6,000 kilograms). The orbiter is a three-axis-stabilized system, with two platforms capable of pointing and stabilizing several optical instruments.

The science payload includes 12 instruments for studying the Martian surface and atmosphere, seven instruments for studying plasma and three instruments for conducting astrophysical studies. The instruments were furnished by the Institute of Space Research and other institutions of the Russian Academy of Sciences, in addition to many countries of Europe.

Several instruments are mounted on the two small stations and the two penetrators to study surface and atmospheric features from Mars’ surface.

In their cruise configuration, each of the small stations is 3.2 feet wide by 3.2 feet high (1 meter by 1 meter) and weighs 110 pounds (50 kilograms). Landed, each station with its deployed petals will lay flat at 42.5 by 23 inches high (1.08 meters by 0.59 meter).

Each penetrator is approximately 6.5 feet (2 meters) long and 2 feet (0.6 meters) in diameter and weighs about 143 pounds (65 kilograms). Each penetrator contains equipment and sensors to study the geophysical and mechanical properties of Martian rocks. The experiments are designed to last about one year so that seasonal variations in measurements may be recorded.

Science Objectives

The goal of Mars ’96 is to investigate the evolution of the Martian atmosphere, surface and interior. The mission is designed to acquire, with a variety of instruments, wide-scale, comprehensive measurements of the physical and chemical processes that occur on Mars today and which took place in the past.

Mars ’96 carries an international suite of remote-sensing instruments, including two cameras from Germany and a spectrometer from France; other nations are involved as well. The small stations will carry French magnetometers, seismometers and descent imagers. They will include German spectrometers, Finish meteorological instruments and computers, Hungarian software and American soil oxidation experiments, as well as Russian science instruments. About 30 U.S. co-investigators are associated with the Mars ’96 orbiter science team.

The newest element of Mars ’96 is the addition of the penetrators, shaped like large darts, which will carry out studies of the Martian soil over time. Penetrators somewhat similar to the Russian penetrators will be flown by the United States in 1998 to augment these soil experiments. With mission lifetimes of about 700 days, the Russian penetrators are designed to study geophysical, meteorological and seismic investigations, and to provide television pictures

of the surface. The instruments are targeted for landing sites near the equator of Mars or around middle latitudes of 20 to 30 degrees in the northern hemisphere.

Specific science goals include:

- **Mars Surface.** Topographic survey of the surface, including high-resolution studies of the terrain; mineralogical mapping; elemental composition of the soil; studies of the subsurface ice and its deep structure.

- **Atmosphere and Climate Monitoring.** Studies of Martian meteorology and climate; abundance of minor components in the atmosphere (water, carbon monoxide, etc.), their variation , vertical distribution and a search for regions with higher humidity; measurement of the three-dimensional field of atmospheric temperatures; pressure variations of different space and time scales; typical features of the atmosphere near volcanoes; characteristics of atmospheric aerosols; neutral and ion compositions of the upper atmosphere.

- **Inner Structure (Geophysics).** Crustal thickness; magnetic field; heat flow; search for active volcanoes; seismic activity.

- **Plasma.** Parameters of the Martian magnetic field, its momentum and orientation; three-dimensional distribution of the ion and energy composition of plasmas (near Mars and along the Earth-Mars trajectory); plasma wave characteristics (electric and magnetic fields); structure of the magnetosphere and its boundaries.

- **Astrophysical Studies.** Localization of cosmic gamma-ray bursts; oscillations of stars and the Sun.

Science Experiments

The Mars ’96 scientific payload to study the Martian surface, atmosphere and interior includes the following instruments:

- **Stereo spectral imaging system (ARGUS).** Includes a multifunctional stereoscopic high-resolution digital camera, including the memory system, thermal control system and calibration system; a wide-angle stereoscopic digital camera; a visible and infrared mapping spectrometer; and a navigation camera.

- **Planetary infrared Fourier spectrometer.**

- **Mapping radiometer.**

- **Mapping high-resolution spectro-photometer.**

- **Multichannel optical spectrometer.**

- ❑ **Ultraviolet spectro-photometer.**
- ❑ **Long-wave radar.**
- ❑ **Gamma spectrometer**
- ❑ **Neutron spectrometer.**
- ❑ **Quadrapole mass spectrometer.**
- ❑ **Energy-mass ion spectrograph and neutral-particle imager.**
- ❑ **Fast omnidirectional non-scanning energy-mass ion analyzer.**
- ❑ **Omnidirectional ionospheric energy-mass spectrometer.**
- ❑ **Ionospheric plasma spectrometers.**
- ❑ **Electron analyzer and magnetometer.**
- ❑ **Wave complex.**
- ❑ **Low-energy charged particle spectrometer.**
- ❑ **Precision gamma spectrometer** (detector provided by United States).
- ❑ **Cosmic and solar gamma-burst spectrometer.**
- ❑ **Stellar oscillations photometer.**

U.S. Contributions to Mars ’96

In addition to the above suite of instruments, Russia’s Mars ’96 also carries two U.S. experiments, the Mars Oxidation Experiment and the Tissue-Equivalent Proportional Counter.

Mars Oxidation Experiment. The experiment will measure the oxidation rate of the Martian environment. In the basic measurement scheme, a detector monitors the change in reflectivity of a thin chemical film which is exposed to the Martian soil or atmosphere. The instrument design is narrowly constrained by mass, volume and power limitations. The total mass is 3 pounds (1.3 kilograms), and all operating power is supplied by internal batteries.

Upon landing and deployment, the instrument operates autonomously, according to a sequence programmed into internal read-only memory. The instrument is designed with a one-year lifetime, but actual operating life is limited by the internal batteries. With all batteries operating, the lifetime is 160 days. Allowing for failure of an individual cell, the minimum lifetime is 80 days.

The instrument's sensor head, which is deployed from one petal of the Russian small station, is comprised of eight sensor cell assemblies, four of which are designed to contact the soil, with the other four exposed to the atmosphere. Within each cell assembly, there are six active sensing sites and six reference sites, for a total of 96 sites. The active sites are protected by a thin membrane of silicon nitride, which protects the sensor films from premature oxidation. These membranes are broken upon deployment, exposing the active films. The reference sites are permanently sealed. The sensor films have been selected to provide a broad range of chemical reactions. Each film type is duplicated in the air and soil cells.

Each of the 96 sensor sites is illuminated by two light-emitting diodes (LEDs), one operating at a wavelength of 590 nanometers and the other at 870 nanometers. The reflected signal is measured by a Reticon silicon photodiode detector array. The sensor sites are coupled to the LEDs and the detector through fiber optics.

Data will be stored in the instrument's own internal computer memory and read out in response to a request from the small station's data system. Command software is designed so that data acquisition takes priority over measurements. If a measurement is in process when telemetry is requested, it will be halted and then continued after the telemetry session is complete. Another feature of the data transmission protocol is that all data will be transmitted a total of three times to reduce the data loss associated with various link failures. During the mission, the experiment team will distribute calibration data and mission data sets in which data from the instrument are merged with pertinent mission information.

Tissue-Equivalent Proportional Counter (TEPC). The TEPC experiment was developed at NASA's Johnson Space Center, Houston, TX, to measure and store accumulated radiation spectra during the interplanetary cruise phase of the Mars '96 mission as well as upon arrival in Mars orbit. Such information should yield important insight into the space radiation environment and potential health risks involved in future human spaceflight.

The overall scientific objectives of the TEPC experiment are to measure the galactic cosmic ray environment between Earth and Mars; to obtain data on solar particle events over the Mars '96 mission's lifetime; and to ascertain with high accuracy the dose-vs.-shielding thickness relationships for these sources of interplanetary radiation. The TEPC and other instruments on Mars '96 will allow prediction of the radiation exposure to be encountered on future space missions; aid design of Mars and Moon vehicles and habitats with minimum mass shielding; offer increased confidence levels in the dose-vs.-shielding thickness relationship; and help decrease the need for expensive ground-based work.

The TEPC spectrometer is part of an international suite of radiation instruments being flown on Mars ’96 in a module called Radius M. The module contains a total of four international instruments: a French dosimeter, a Russian particle spectrometer, a Bulgarian dosimeter and the TEPC. Various versions of the TEPC insturment have been flown on the U.S. Space Shuttle and on the Russian Mir space station. Dr. Gautam Badhwar is the Principal Investigator for TEPC at Johnson Space Center.

Program/Project Management

The Mars Global Surveyor and Mars Pathfinder missions are managed by the Jet Propulsion Laboratory for NASA's Office of Space Science, Washington, DC. The Mars Global Surveyor spacecraft was built by Lockheed Martin Astronautics Inc., Denver, CO. The Delta II launch vehicles were built by McDonnell Douglas Aerospace Corp., Huntington Beach, CA.

At NASA Headquarters, Dr. Jurgen Rahe is Science Director for Solar System Exploration. Dr. Joseph Boyce is Mars Program Scientist and Program Scientist for Mars Pathfinder. Donald Ketterer is Program Executive for Mars Pathfinder. Mary Kaye Olsen is Program Executive for Mars Global Surveyor, and Patricia Rogers is Associate Program Scientist. Kenneth Ledbetter is Director of the Mission and Payload Development Division.

At the Jet Propulsion Laboratory, Norman Haynes is Director for the Mars Exploration Directorate. Donna Shirley is Manager of the Mars Exploration Program. For Mars Global Surveyor, Glenn E. Cunningham is Project Manager and Dr. Arden Albee of the California Institute of Technology is Project Scientist. For Mars Pathfinder, JPL's Anthony Spear is Project Manager and Dr. Matthew Golombek is Project Scientist.

At the Russian Academy of Sciences Space Research Institute (IKI), Moscow, Russia, Dr. Albert A. Galeev is Scientific Leader of the Mars '96 mission and Director of the Russian Academy of Sciences. Professor Vassili I. Moroz is Deputy Scientific Leader. Dr. Alexandre Zakharov is Mars '96 Project Scientist. The Mars '96 spacecraft was developed by the Babakin Engineering Research Center of the Lavochkin Research and Production Association in Russia.

10-11-96