The World's Most Powerful X-Ray Telescope

WWW.SHUTTLEPRESSKIT.COM

Updated July 8, 1999

STS-93 Table of Contents

Mission Overview 1

Mission Profile 3

Crew 6

Flight Day Summary.....9

Payloads

Biological Research in Canisters.....11

Cell Culture Model, Configuration C.....16

Chandra X-Ray Observatory 18

Commercial Generic Bioprocessing Apparatus.....37

Gelation of Sols: Applied Microgravity Research 41

Lightweight Flexible Solar Array Hinge.....46

Micro-Electromechanical Systems 48

Midcourse Space Experiment 50

Plant Growth Investigations in Microgravity 1.....52

Shuttle Amateur Radio Experiment II.....54

Shuttle Ionospheric Modification With Pulsed Localized Exhaust.....57

Southwest Ultraviolet Imaging System.....59

Space Tissue Loss.....63

DTO/DSO/RME

DSO 496 Individual Susceptibility to Postflight Orthostatic Intolerance.....64

DSO 631 Integrated Measurement of the Cardiovascular Effects of Space Flight 65

DSO 331 Interaction of the Space Shuttle Launch and Entry Suit and Sustained Weightlessness on Egress Locomotion 66

DSO 493 Monitoring Latent Virus Reactivation and Shedding in Astronauts.....67

DSO 498 Space Flight Immune Function.....68

DTO 805 Crosswind Landing Performance.....69

DTO 631 Digital Video Camcorder Demonstration 70

DTO 700-17A High-Definition Television Camcorder Demonstration 71

DTO 260 Shuttle Radar Topography Mission Fly Casting Maneuver.....73

RME 1318 Treadmill Vibration Isolation and Stabilization System.....74

Media Assistance 75

Contacts.....77

Shuttle Reference

Shuttle Abort History 78

Shuttle Abort Modes.....80

Space shuttle External Tank 86

Space Shuttle Rendezvous Maneuvers 90

Space Shuttle Solid Rocket Boosters 91

Space Shuttle Super Light Weight Tank (SLWT).....99

Mission Overview

STS-93 MISSION MARKS MILESTONES IN SPACE FLIGHT HISTORY

NASA will mark milestones in both human space flight history and astronomy on the 95th Space Shuttle mission with the launch of the first female Shuttle Commander and the Chandra X-Ray Observatory.

Columbia is scheduled to liftoff at 12:36 a.m. EDT from Launch Pad 39-B at the Kennedy Space Center on July 20 on the STS-93 mission, carrying Chandra to orbit to join the Hubble Space Telescope and the Compton Gamma Ray Observatory as the next in NASA's series of "Great Observatories".

Chandra will spend at least five years in a highly elliptical orbit which will carry it one-third of the way to the moon to observe invisible and often violent realms of the cosmos containing some of the most intriguing mysteries in astronomy ranging from comets in our solar system to quasars at the edge of the universe. At 50,162 pounds, Chandra, along with its two-stage, solid-fuel Inertial Upper Stage booster and associated cargo bay equipment is the heaviest payload ever launched on the Shuttle. Chandra is named after the famed Nobel Laureate astrophysicist, Dr. Subrahmanyan Chandrasekhar.

Columbia's 26th flight is led by Air Force Col. Eileen Collins, who will become the first woman to command a Space Shuttle mission following two previous flights as Pilot. Collins, 42, flew to the Mir Space Station on STS-63 in 1995 in the first Shuttle rendezvous with the Russian space outpost and revisited Mir during the STS-84 mission in 1997.

Her Pilot is Navy Captain Jeff Ashby, 45, who will be making his first flight into space.

Air Force Lt. Col. Catherine "Cady" Coleman, 38, will be responsible for the deployment of the Chandra X-Ray Observatory in this, her second flight into space. Steven A. Hawley, Ph.D., 47, who deployed the Hubble Space Telescope nine years ago, will be the flight engineer during launch and landing and will be responsible for many secondary experiments, including operation of the Southwest Ultraviolet Imaging System, a small telescope which will be mounted in the middeck of Columbia. This is Hawley's fifth flight. French Air Force Col. Michel Tognini, 49, of CNES, the French Space Agency, rounds out the crew. Tognini is making his second trip into space after spending two weeks on the Mir Space Station as a visiting cosmonaut in 1992.

Columbia's planned five-day mission is scheduled to end with a night landing at the Kennedy Space Center just after 11:30 p.m. EDT on July 24 to wrap up the second Shuttle flight of the year.

Updated: 07/07/1999

STS-93

Columbia OV102

Launch: Tuesday, July 20, 1999
12:36 AM (eastern time)

Mission Objectives

The primary objective of the STS-93 mission is the deployment of the $1.5 billion Chandra X-Ray Observatory, the third in NASA's series of "Great Observatories".

Astronaut Cady Coleman is scheduled to deploy the observatory about seven hours after liftoff. Chandra will spend the next five years in a highly elliptical orbit which will take it one-third of the way to the moon to study invisible and often violent sources of astronomical activity in the distant universe.

Secondary objectives include the firing of Columbia's jet thrusters at various times during the flight to help an Air Force satellite gather data on the characteristics of jet plumes in orbit.

In addition, crew members will operate the Southwest Ultraviolet Imaging System, a small telescope which will be mounted at the side hatch window in Columbia's middeck to collect data on ultraviolet light originating from a variety of planetary bodies.

Pilot Jeff Ashby and Mission Specialists Steve Hawley and Michel Tognini will conduct an in-flight assessment of an exercise system planned for the International Space Station. The on-orbit treadmill, referred to as the Treadmill Vibration Isolation and Stabilization (TVIS) system, should provide the crew with a reliable exercise device while also meeting International Space Station (ISS) load transmission requirements to avoid disrupting on-orbit experiments.

Crew

Commander:	Eileen M. Collins
Pilot:	Jeffrey S. Ashby
Mission Specialist 1:	Cady G. Coleman
Mission Specialist 2:	Steven A. Hawley
Mission Specialist 3:	Michel Tognini

Launch

Orbiter:	Columbia OV102
Launch Site:	KSC Pad 39-B
Launch Window:	46 minutes
Altitude:	153 nautical miles
Inclination:	28.45 degrees
Duration:	4 Days 22 Hrs. 56 Min.

Vehicle Data

Shuttle Liftoff Weight:	4,524,727 lbs.
Orbiter/Payload Liftoff Weight:	270,142 lbs.
Orbiter/Payload Landing Weight:	219,980 lbs.

Payload Weights

SWUIS	60 lb.
	50,162 lbs.

Software Version: OI-26B

Space Shuttle Main Engines

SSME 1: #2012 **SSME 2:** #2031 **SSME 3:** #2019

External Tank: ET-99

SRB Set: BI-097

Auxiliary Power Units:

APU-1: SN 401 **APU-2:** SN 410 **APU-3:** SN 304

Fuel Cells:

FC-1: SN 113 **FC-2:** SN 125 **FC-3:** SN 115

Shuttle Aborts

Abort Landing Sites

RTLS: Kennedy Space Center
TAL: Banjul (prime); Ben Guerir (alternate)
AOA: Edwards Air Force Base, California

Landing

Landing Date:	07/24/99
Landing Time:	11:32 PM (eastern time)
Primary Landing Site:	Kennedy Space Center Shuttle Landing Facility

Payloads

Cargo Bay

Chandra X-Ray Observatory

In-Cabin

Plant Growth Investigations in Microgravity 1
Southwest Ultraviolet Imaging System
Gelation of Sols: Applied Microgravity Research
Space Tissue Loss
Lightweight Flexible Solar Array Hinge
Cell Culture Model, Configuration C
Shuttle Amateur Radio Experiment II
Commercial Generic Bioprocessing Apparatus
Micro-Electromechanical Systems
Biological Research in Canisters

Crew Profile Menu

Commander: Eileen M. Collins

Collins is responsible for the overall success of the mission and the safety of the crew. She will also be responsible for an engineering test, referred to as the flycast maneuver, to assess the jet firing technique that will be used in September's Shuttle Radar Topography mission. This technique will be used on STS-99 to maintain the stability of a 200-foot radar mast which will tower above the cargo bay of the shuttle Endeavour.
Collins was the pilot on the STS-63 mission in February, 1995 and the STS-84 mission in May, 1997.

Ascent Seating: Flight Deck - Port Forward
Entry Seating: Flight Deck - Port Forward

Pilot: Jeffrey S. Ashby

Ashby will be responsible for key shuttle systems during launch and landing, will lead any in-flight maintenance work which may be required and would serve as overall coordinator for any unplanned spacewalk which might be required. Ashby will also conduct a series of jet firings in an Air Force experiment in which an orbiting satellite will monitor the characteristics of jet plumes in space.

STS-93 will be Ashby's first flight.

Ascent Seating: Flight Deck - Starboard Forward
Entry Seating: Flight Deck - Starboard Forward

Mission Specialist 1: Cady G. Coleman

Coleman's primary responsibility on STS-93 is the deployment of the Chandra X-Ray Observatory. She will insure that all systems associated with Chandra and its Inertial Upper Stage booster are in readiness for deployment and that the telescope is ready to begin its five-year astronomical mission.

Coleman will also conduct a number of scientific and engineering experiments during the flight in the days following Chandra's deployment. Coleman would be one of the space walkers in the event an unplanned space walk is required during the flight.

Coleman's first flight occurred on the STS-73 mission in Oct./Nov., 1995.

Ascent Seating: Mid Deck - Port
Entry Seating: Flight Deck - Starboard Aft

Mission Specialist 2: Steven A. Hawley

As flight engineer for Columbia, Hawley will be responsible for helping to monitor shuttle systems on the flight deck behind Collins and Ashby during launch and landing.

Hawley will assist Coleman and Tognini during the deployment of the Chandra X-Ray Observatory. He will also be the primary operator of the Southwest Ultraviolet Imaging System, a small telescope which will be used to study the ultraviolet characteristics of planetary bodies.

Hawley will conduct other secondary experiments during the course of the five-day mission.

Hawley has flown four previous missions, STS-41D, in Aug./Sept., 1984, STS-61C in January, 1986, STS-31 in April, 1990 and STS-82 in February, 1997.

Ascent Seating: Flight Deck - Center Aft
Entry Seating: Flight Deck - Center Aft

Mission Specialist 3: Michel Tognini

Tognini will back up Coleman during the deployment of the Chandra X-Ray Observatory and would be the lead space walker in the event an unplanned space walk is required. In addition, Tognini will conduct a number of secondary experiments, including the operation of the Southwest Ultraviolet Imaging System and the shuttle's ham radio.

Tognini's first space flight occurred in July/Aug., 1992 when he was launched on a Russian Soyuz rocket to spend two weeks aboard the Mir Space Station conducting a number of French science experiments.

Ascent Seating: Flight Deck - Starboard Aft
Entry Seating: Mid Deck - Port

Updated: 07/07/1999

STS-93

Flight Day Summary

DATE TIME (EST)	DAY	MET	EVENT
07/20/99 12:36:00 AM	1	000/00:00:00	Launch
07/20/99 2:11:00 AM	1	000/01:35:00	AXAF PWRUP
07/20/99 3:06:00 AM	1	000/02:30:00	IUS PDCO
07/20/99 5:56:00 AM	1	000/05:20:00	MNVR TO DEPLOY ATT
07/20/99 6:11:00 AM	1	000/05:35:00	TILT TBL TO 29
07/20/99 7:06:00 AM	1	000/06:30:00	IUS/PI LOCK
07/20/99 7:53:00 AM	1	000/07:17:00	DEPLOY IUS
07/20/99 9:06:00 AM	1	000/08:30:00	KU-BD ACTIVATION
07/20/99 9:26:00 AM	1	000/08:50:00	PWR DOWN GRP B
07/20/99 9:31:00 AM	1	000/08:55:00	VTR PLAYBACK
07/20/99 11:36:00 AM	1	000/11:00:00	SLEEP
07/20/99 7:51:00 PM	2	000/19:15:00	WAKE
07/20/99 9:21:00 PM	2	000/20:45:00	OMS PREP BURN
07/21/99 12:15:00 AM	2	000/23:39:00	SWUIS OPS MOON
07/21/99 1:52:00 AM	2	001/01:16:00	SWUIS OPS VENUS
07/21/99 3:44:00 AM	2	001/03:08:00	SWUIS OPS JUPITER
07/21/99 4:46:00 AM	2	001/04:10:00	FCMS OPS
07/21/99 5:41:00 AM	2	001/05:05:00	PAO EVENT
07/21/99 6:46:00 AM	2	001/06:10:00	CGBA TV
07/21/99 7:33:00 AM	2	001/06:57:00	SAREX SCHOOL
07/21/99 10:36:00 AM	2	001/10:00:00	SLEEP
07/21/99 6:51:00 PM	3	001/18:15:00	WAKE
07/21/99 9:26:00 PM	3	001/20:50:00	SWUIS OPS VENUS
07/21/99 9:32:00 PM	3	001/20:56:00	SAREX SCHOOL
07/21/99 11:16:00 PM	3	001/22:40:00	SWUIS OPS SATURN 1
07/21/99 11:16:00 PM	3	001/22:40:00	SAREX SCHOOL
07/22/99 1:06:00 AM	3	002/00:30:00	SWUIS OPS VULCANOIDS
07/22/99 2:38:00 AM	3	002/02:02:00	SWUIS OPS VULCANOIDS
07/22/99 4:01:00 AM	3	002/03:25:00	SWUIS OPS VULCANOIDS
07/22/99 4:55:00 AM	3	002/04:19:00	SWUIS OPS VENUS
07/22/99 5:41:00 AM	3	002/05:05:00	PAO EVENT
07/22/99 9:36:00 AM	3	002/09:00:00	SLEEP
07/22/99 5:51:00 PM	4	002/17:15:00	WAKE

Flight Day Summary, continued

DATE TIME (EST)	DAY	MET	EVENT
07/22/99 8:21:00 PM	4	002/19:45:00	RME 1318 TVIS
07/22/99 9:31:00 PM	4	002/20:55:00	SAREX SCHOOL
07/22/99 9:48:00 PM	4	002/21:12:00	SWUIS OPS SATURN 2
07/22/99 10:08:00 PM	4	002/21:32:00	RME 1318 TVIS
07/22/99 11:11:00 PM	4	002/22:35:00	SAREX SCHOOL
07/22/99 11:18:00 PM	4	002/22:42:00	SWUIS OPS JUPITER
07/23/99 1:05:00 AM	4	003/00:29:00	RME 1318 TVIS
07/23/99 1:49:00 AM	4	003/01:13:00	PGF HARVEST
07/23/99 3:36:00 AM	4	003/03:00:00	SWUIS OPS MOON
07/23/99 3:39:00 AM	4	003/03:03:00	PGF HARVEST
07/23/99 4:06:00 AM	4	003/03:30:00	PAO EVENT
07/23/99 5:02:00 AM	4	003/04:26:00	SWUIS OPS VENUS
07/23/99 5:06:00 AM	4	003/04:30:00	PAO EVENT
07/23/99 8:36:00 AM	4	003/08:00:00	SLEEP
07/23/99 4:51:00 PM	5	003/16:15:00	WAKE
07/23/99 7:59:00 PM	5	003/19:23:00	CREW CONF
07/23/99 9:16:00 PM	5	003/20:40:00	FCS C/O
07/23/99 10:16:00 PM	5	003/21:40:00	RCS HOT FIRE
07/24/99 12:11:00 AM	5	003/23:35:00	CABIN CONFIG/STOW
07/24/99 2:46:00 AM	5	004/02:10:00	KU-BD ANT STOW
07/24/99 7:36:00 AM	5	004/07:00:00	SLEEP
07/24/99 3:51:00 PM	6	004/15:15:00	WAKE
07/24/99 5:24:00 PM	6	004/16:48:00	PWR UP GRP B
07/24/99 6:31:00 PM	6	004/17:55:00	DEORBIT PREP
07/24/99 10:31:00 PM	6	004/21:55:00	DEORBIT BURN
07/24/99 11:32:00 PM	6	004/22:56:00	LANDING

Updated: 07/08/1999

Payloads

Biological Research in Canisters

In-Cabin

Prime:	Michel Tognini	**Principal Investigator:**	Dr. Anireddy S. Reddy, Colorado State University, Ft. Collins, Colo., for BRIC-11; Dr. Stanley Roux, University of Texas at Austin, for BRIC-12
Backup:	Eileen Collins	**Project Scientist:**	Dr. William Knott, NASA Kennedy Space Center, Fla., for BRIC-11 and BRIC-12

Overview

The objective of the BRIC payload is to investigate the effects of space flight on small arthropod animal and plant specimens. The BRIC hardware has a variety of configurations, depending on the scientific requirements of each flight. The canisters contain two aluminum chambers that hold the specimen support hardware. The canisters and freezer are stowed in a standard middeck locker with at least one-half inch of Pyrell foam on each side. No orbiter power is required for any experiment configuration.

STS-93 will use the Block II configuration, which consists of two BRIC-60 (82-mm diameter) canisters, one pair of cryogenic gloves, and one gaseous nitrogen freezer (GN2) in a single middeck locker. The flight crew will be available at regular intervals to monitor and control payload/experiment operations. The Block II configuration also requires a crew member to don a pair of insulating gloves, remove a canister from the locker, and replace it in the GN2 freezer. There will be two experiments on STS-93, BRIC-11 and BRIC-12.

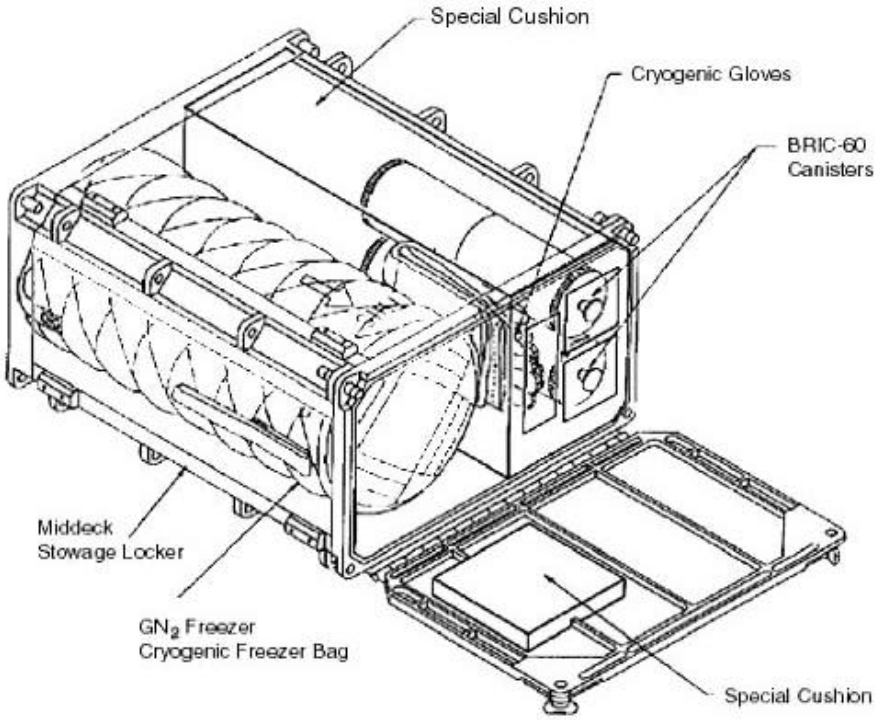

BRIC-11: Investigations of Global Changes in Gene Expression in Response to Gravity

Growth of plants in space is essential for long-term presence of humans in space. Plants, in addition to producing food, can replenish oxygen and remove carbon dioxide and other nitrogenous wastes. Hence, plants play a critical role in developing a self-sustained, regenerative life support system in space. Plants on Earth are constantly influenced by gravity, which controls several aspects of their growth and development. For example, the roots grow toward gravity (positive gravitropism) and the shoots grow away from gravity (negative gravitropism). The effect of reduced gravity on plants is poorly understood. Furthermore, the mechanisms by which plants sense and respond to gravity remain largely unknown. In order to grow plants in space, it is essential to understand the effects of microgravity on growth and development, especially at the molecular and cell biological level. Recent genetic studies of mutants with no response or an altered response to gravity indicate that the perception and transduction of gravity signals involve specific gene products.

The objective of BRIC-11 is to investigate gravity-regulated gene expression by using Earth- and space-grown seedlings. These studies represent a first step toward understanding the effects of gravity on gene regulation. Arabidopsis was chosen because it offers a number of advantages for molecular genetic studies. It also allows the investigator to analyze the expression of thousands of genes simultaneously by using a DNA "chip" technology.

The experiment involves growing seedlings in microgravity on the space shuttle middeck and on Earth, and then analyzing them to determine the effects of gravity on gene expression. BRIC hardware will be used to germinate Arabidopsis seeds in the dark under sterile conditions. Each BRIC module will accommodate twelve 65-mm Petri dishes, each with about 10,000 seeds. Four such canisters will be used for germinating the seeds in the flight, and four canisters will be used as ground controls in the orbiter environment simulator at Kennedy Space Center. About four days into germination, a crew member will freeze two of the flight canisters in the gaseous nitrogen freezer and the ground crew will also freeze two of the ground canisters.

The Earth- and space-grown seedlings will be then analyzed through microarray-based monitoring for global changes in the expression of thousands of Arabidopsis genes. The RNA from the Earth- and space-grown samples will be used to synthesize fluorescent-labeled cDNAs and hybridize them to a bank of about 10,000 Arabidopsis cDNAs on DNA "chips." These chips will then be scanned to determine qualitative and quantitative changes in gene expression in response to microgravity. The microarray analysis will be performed in collaboration with the Monsanto Company, St. Louis, Mo.

The genes whose expression is affected by gravity and/or microgravity will be identified and characterized to understand their role in gravity signal transduction. In the long run, it may be possible to engineer such genes for regulation by controllable factors other than gravity.

BRIC-12: Early Development of Fern Gametophytes in Microgravity

The physiological responses of animals and plants to gravity are complex, involving the interaction of many different cell types. In order to simplify their study of the cellular basis of gravity sensing and response, biologists have recently begun studying gravity effects in single cells, where all the actions and reactions occur in one place.

One such model system for gravitational biology studies is the germinating spore cell of the fern Ceratopteris richardii. These spore cells appear to be insensitive to gravity as long as they are kept in darkness; but once induced to germinate by light, they show a characteristic gravity response. Each single-celled spore has a nucleus in the center. During the first 30 hours or so after light activation, the nucleus moves along a kind of random path restricted to a region near the cell center. Then, under the influence of 1 g on Earth, the nucleus abruptly migrates downward along a relatively straight path to the lower part of the cell. There, about 18 hours later, it divides, producing two cells--a smaller one that develops into a rootlike rhizoid and a larger one that develops into the leafy part of the plant, the prothallus. The gravity-directed migration of the nucleus exactly predicts the direction in which the rhizoid will emerge and grow after the spore germinates. In addition, the unequal cell division that results from the asymmetric positioning of the nucleus after its downward migration may be a prerequisite for the two different cell types to form (rhizoid and prothallus). Thus, within a limited period following light activation of the spores, gravity determines the polarity of each spore cell--which end will have the rhizoid and which end will have the prothallus.

On STS-93, scientists will take advantage of this simple system to study gravity effects at the most basic level. The shuttle facilities, which include the Space Tissue Loss (STL) B hardware developed at the Walter Reed Army Institute of Research, will allow them to investigate two sets of questions. One set of experiments will use the STL-B on-board video microscopy system to find out whether, in the absence of a strong gravity signal, the nucleus will migrate randomly or not at all and, if not, whether the failure to migrate will prevent normal development of the rhizoid and prothallus. Another question to be answered concerns the "random walk" of the nucleus about the center of the cell during the first 30 hours after the spore cell is activated. This movement (as well as the later downward movement of the nucleus) is driven by molecular motors, which may be "turned on" by the tension and compression forces created in the cell by gravity. Scientists want to see whether the molecular motors will operate normally in microgravity or will fail to turn on, leaving the nucleus motionless in the center of the cell. This information would give us an insight into how these molecular motors, which are common to all plant and animal cells, can be controlled.

A second set of BRIC-12 experiments will investigate whether gravity is turning on or off any specific genes during the period in which it is setting the polarity of the cell. Scientists already know that hundreds of genes are turned on (transcribed into messenger RNA) or turned off during this period, and they believe that most are programmed do so at this time whether gravity is present or not. It is possible, though, that the expression of some of these genes may require the tension and compression forces caused by gravity in the cell. To help scientists find the answer, astronauts on the STS-93 mission will freeze light-activated spores at four different time points--three during the period when gravity fixes the cell polarity on Earth and one after this period should be over (45 hours after the spores are light-activated in orbit). After the shuttle lands, the pattern of gene expression in these space-flown spores at the selected four time points will be compared to the pattern at the same four time points in spores on Earth.

The germinating spores represent a relatively uniform population of cells that have all been induced to start their development at the same time (by a light signal). Because of the cells' uniformity and the relative synchrony of their development, there is a unique opportunity to resolve subtle differences in the pattern of gene expression between cells growing in microgravity and cells on Earth. If the experiment demonstrates that any genes are regulated by gravity, it is reasonable to postulate are they are instrumental to the cells' ability to sense or respond to gravity.

History/Background

One of four BRIC payload hardware configurations is chosen for each flight to meet scientific requirements:

Block I: five 82-mm-diameter dual-chamber BRIC-60 canisters in a single middeck locker

Block II: two 82-mm-diameter dual-chamber BRIC-60 canisters, one pair of cryogenic gloves, and one gaseous-nitrogen freezer in a single middeck locker

Block III: three 114-mm-diameter single-chamber BRIC-100 canisters in a single middeck locker

Block IV: nine 114-mm-diameter single-chamber BRIC-VC canisters in a single middeck locker

Block V: three 114-mm-diameter single-chamber BRIC-100 canisters and one BRIC phase-change sleeve in a single middeck locker

The canisters are self-contained aluminum holders for the specimen support hardware and require no orbiter power. The canisters and freezer are housed in a standard middeck locker. The BRIC Block I, Block III, and Block IV experiment configurations require no crew interaction. The Block II configuration requires a crew member to put on a pair of insulating gloves, remove a canister from the locker, and replace it in the freezer.

See the STS-95 BRIC discussion for a summary of previous missions flown.

Benefits

The knowledge obtained from BRIC-11 will help us understand how plants perceive and respond to gravity signals. It will also be useful in growing plants under microgravity conditions and building life support systems in space for long-duration missions. These studies could also lead to advances in plant biotechnology and medicine.

If the BRIC-12 experiments and subsequent tests reveal the identity of genes needed for gravity sensing or response in single cells, scientists will greatly increase their understanding of how gravity alters cell growth and development.

Updated: 07/07/1999

Payloads

Cell Culture Model, Configuration C

In-Cabin

Prime: Eileen Collins

Principal Investigator: Dr. Kenton Gregory, Oregon Medical Laser Center in Portland, Ore., and Dr. Eugenia Wang of McGill, University in Montreal, Quebec, Canada

Backup: Cady Coleman

Overview

The objectives of this payload are to validate cell culture models for muscle, bone, and endothelial cell biochemical and functional loss induced by microgravity stress; to evaluate cytoskeleton, metabolism, membrane integrity, and protease activity in target cells; and to test tissue loss pharmaceuticals for efficacy.

The experiment unit fits into a single standard middeck locker with the door panels removed. The unit takes in and vents air to the cabin via the front panel. The experiment is powered and functions continuously from prelaunch through postlanding. The analysis module for STS-93 is CCM Configuration C. It has a hermetically sealed fluid path assembly containing the cells under study, all media for sustained growth, automated drug delivery provisions to test candidate pharmaceuticals, in-line vital activity and physical environment monitors, integral fraction collection capabilities, and cell fixation facilities. The fluid path and media are cooled by a 4-degree Celsius active cooling chamber and associated cabling and driver circuitry. (This payload was formerly called Space Tissue Loss, Configuration A.)

STS-93 will be the maiden voyage of the Walter Reed Army Institute of Research (WRAIR) Cell Culture Module with cooling. CCM-C is the sister payload of the CCM, which has been used to support collaborative cell culture experiments since 1994. CCM-C is identical to CCM except that it reduces the number of experiment bioreactors to accommodate a resident cooling chamber. This chamber can be used to extend the life of stored fluids essential to cell culture nutrients and samples that would normally break down in the 37-degree Celsius environment of the CCM.

The CCM-C features two exciting collaborative experiments that have never been flown in space. The first, involving endothelialized elastin heterografts, seeks to demonstrate microgravity effects on blood vessel function and gene expression. The second experiment will study rapid-aging effects and genetic alterations that occur in space and are thought to correlate with aging on Earth.

CCM-C will also flight-qualify three different sensors essential for long-duration experimentation in space and useful in ground applications as well. The sensors include a miniature pH electrode developed by NASA Ames Sensors 2000 program, a noninvasive pH sensor developed by engineers at WRAIR, and a noninvasive oxygen sensor developed by Dr. Mark Arnold at the University of Iowa in Iowa City. These sensors will make it possible to determine and record cell growth and metabolism during the mission and will allow feedback control for better, more reproducible experiments.

CCM-C is integrated and flown under the direction of the DOD Space Test Program Office at the Johnson Space Center in Houston, Tex.

Updated: 07/07/1999

Payloads

Chandra X-Ray Observatory

Payload Bay

50,162 lbs. lbs.

Prime: Cady Coleman

Backup: Michel Tognini

Project Scientist: Dr. Martin Weisskopf, Marshall Space Flight Center

Overview

NASA's Chandra X-Ray Observatory, the world's most powerful X-Ray telescope, is the primary payload for Space Shuttle mission STS-93. With a combination of sensitive instruments and highly X-Ray reflective mirrors, the observatory will allow scientists to study the origin, structure and evolution of our universe in greater detail than ever before.

Chandra is the third in NASA's family of "Great Observatories."

Complementing the Hubble Space Telescope and the Compton Gamma Ray Observatory, which are already in Earth orbit, the Chandra X-Ray Observatory will study X-Rays rather than visible light or gamma rays.

Since X-Rays are absorbed by the Earth's atmosphere, space-based observatories are necessary to study these phenomena. By capturing images created by these invisible rays, the observatory will allow scientists to analyze some of the greatest mysteries of the universe. Chandra will serve as a unique tool to study detailed physics in a laboratory that cannot be replicated here on Earth - the universe itself.

Scientists will use the Chandra X-Ray Observatory to learn more about black holes, to study quasars at the edge of the observable universe, and even to analyze comets in our own solar system. By mapping the location of X-Ray energy throughout the universe, they hope to find clues to the identity of the missing mass - called "Dark Matter" - that must exist but cannot be seen.

Carried into space in Columbia's payload bay, Chandra will be deployed by the Space Shuttle crew, boosted to a transfer orbit by an Inertial Upper Stage, and propelled to its operating orbit by the observatory's own propulsion system. The observatory will undergo several weeks of activation and checkout before being turned over to the scientific community to begin its five-year research mission.

Named in honor of the late Indian-American Nobel Laureate Dr. Subrahmanyan Chandrasekhar, the Chandra observatory was formerly known as the Advanced X-Ray Astrophysics Facility (AXAF). The Chandra X-Ray Observatory program is managed by NASA's Marshall Space Flight Center in Huntsville, AL, for NASA's Office of Space Science.

Payload Components

The Chandra X-Ray Observatory payload includes the observatory itself, a solid fuel Inertial Upper Stage booster which will help propel Chandra to its operating orbit, and equipment which supports the payload while in the Space Shuttle payload bay.

Observatory
The Chandra X-Ray Observatory is composed of three major assemblies: the spacecraft, telescope and science instrument module.

The Spacecraft
The spacecraft module contains computers, communication antennas and data recorders to transmit and receive information between the observatory and ground stations. The on- board computers and sensors - with ground-based control center assistance - command and control the observatory and monitor its health during its expected five-year lifetime.

The spacecraft module also provides rocket propulsion to move and aim the entire observatory. It contains an aspect camera that tells the observatory its position and orientation relative to the stars, and a Sun sensor that protects it from excessive light. Two three-panel solar arrays provide the observatory with 2,350 watts of electrical power and charge three nickel-hydrogen batteries that provide backup power.

The Telescope System

At the heart of the telescope system is the high-resolution mirror assembly. Since high-energy X-Rays would penetrate a normal mirror, special cylindrical mirrors were created. The two sets of four nested mirrors resemble tubes within tubes. Incoming X-Rays will graze off the highly polished mirror surfaces and be funneled to the instrument section for detection and study.

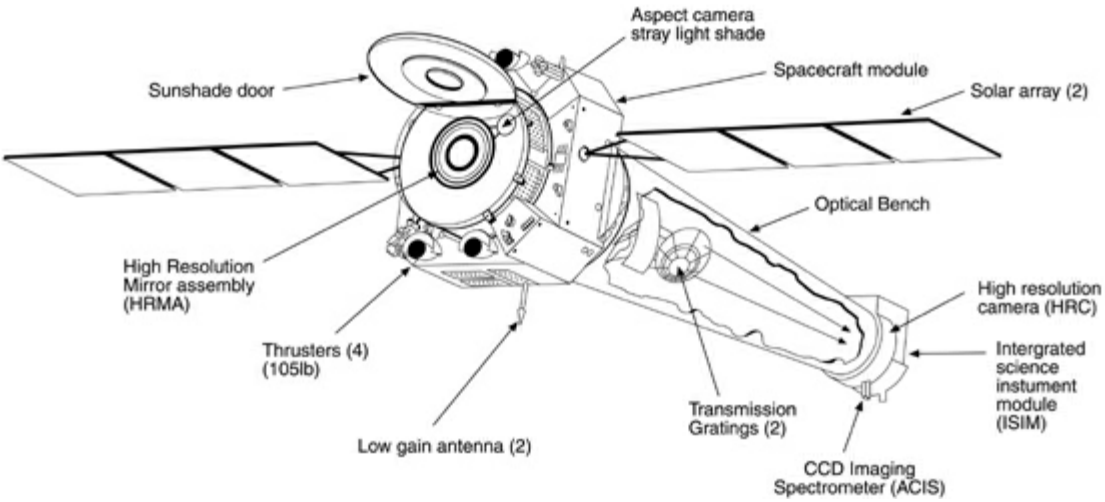

The mirrors of the X-Ray observatory are the largest of their kind and the smoothest ever created. If the state of Colorado were the same relative smoothness, Pike's Peak would be less than one inch tall. The largest of the eight mirrors is almost four feet in diameter and three feet long. Assembled, the mirror group weighs more than one ton.

The High-Resolution Mirror Assembly is contained in the cylindrical "telescope" portion of the observatory. The entire length of the telescope is covered with reflective multi-layer insulation that will assist heating elements inside the unit in keeping a constant internal temperature. By maintaining a precise temperature, the mirrors within the telescope will not be subjected to expansion and contraction - thus ensuring greater accuracy in observations.

The assembled mirrors were tested at the Marshall Center's world-class X-Ray Calibration Facility. The calibration facility verified the observatory can differentiate between objects separated by one-half arc second. This is equivalent to being able to read the letters on a stop sign from 12 miles away.

The Chandra X-Ray Observatory represents a scientific leap in ability over early X-Ray missions. With its combination of large mirror area, accurate alignment and efficient X-Ray detectors, Chandra has eight times greater resolution and is 20-to-50 times more sensitive than any previous X-Ray telescope. By seeing X-Rays rather than visible light, Chandra will examine the extremely hot and violent universe. In comparison, NASA's Hubble Space Telescope looks at visible and ultraviolet light.

Science Instruments

Within the instrument section of the observatory, two instruments at the narrow end of the telescope cylinder will collect X-Rays for study. Each instrument can serve as an imager to "take pictures," or a spectrometer, a device to measure energy levels.

The High-Resolution Camera will record X-Ray images, giving scientists an unequaled look at violent, high-temperature occurrences like the death of stars or colliding galaxies. The High-Resolution Camera is composed of two clusters of 69 million tiny lead-oxide glass tubes. The tubes are only one-twentieth of an inch long and just one-eighth the thickness of a human hair. When X-Rays strike the tubes, particles called electrons are released. As the electrons accelerate down the tubes - driven by high voltage - they cause an avalanche of about 30 million more electrons. A grid of electrically charged wires at the end of the tube assembly detects this flood of particles and allows the position of the original X-Ray to be precisely determined. By electronically determining the entry point of the original X-Ray, the camera can reproduce a high-resolution image of the object that produced the X-Rays. The High-Resolution Camera will complement the Charge-Coupled Device Imaging Spectrometer, also contained in the science instrument module.

The AXAF CCD Imaging Spectrometer (ACIS) is capable of recording not only the position, but also the color, or energy, of the X-Rays. The ACIS is made up of 10 charge-coupled device arrays. These detectors are similar to those used in home video recorders and digital cameras, but are designed to detect X-Rays. The ACIS can distinguish up to 50 different energies within the range that the observatory operates. In order to gain even more energy information, two screen-like instruments - called diffraction gratings - can be inserted into the path of the X-Rays between the telescope and the detectors. The gratings change the path of the X-Ray depending on its energy and the X-Ray cameras record the color and position. One grating concentrates on the higher and medium energies and uses the imaging spectrometer as a detector. The other grating disperses low energies and is used in conjunction with the High Resolution Camera. Commands from the ground allow astronomers to select which grating to use.

By studying these X-Ray rainbows, or spectra, and recognizing signatures of known elements, scientists can determine the composition of the X-Ray producing objects, and learn how the X-Rays are produced.

Inertial Upper Stage

On STS-93, the Inertial Upper Stage will help propel the Chandra X-Ray Observatory from low Earth orbit into an elliptical orbit reaching one-third of the way to the Moon.

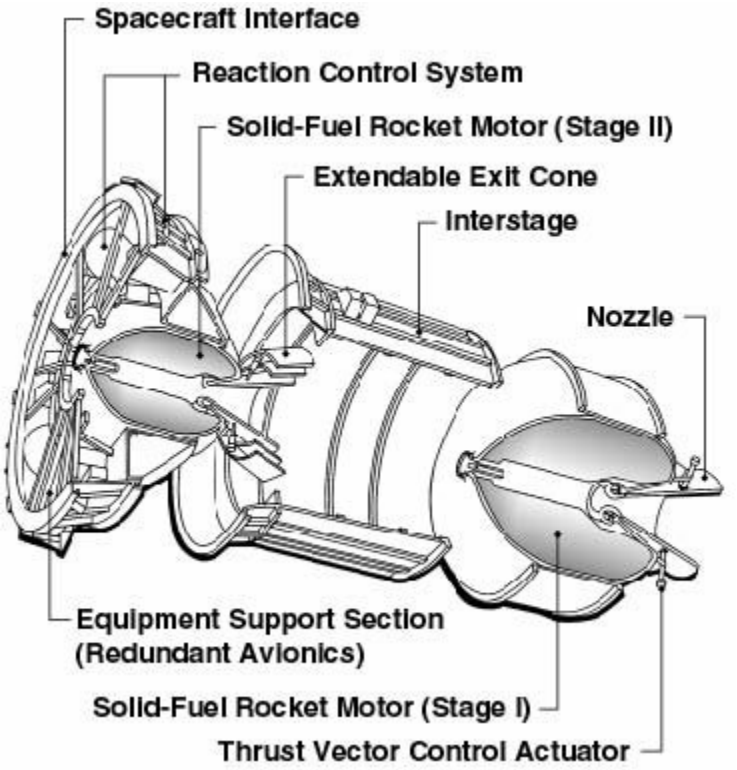

The Inertial Upper Stage is a two stage, inertially guided, three-axis stabilized, solid fuel booster used to place spacecraft into a high-Earth orbit or boost them away from the Earth on interplanetary missions. It is approximately 17 feet long and 9.25 feet in diameter, with an overall weight of approximately 32,500 pounds.

The Inertial Upper Stage first stage is comprised of a solid rocket motor and an interstage. The first stage solid rocket motor normally contains a maximum 21,580 pounds of propellant and generates an average of 44,000 pounds of thrust. For the Chandra mission, the first stage solid rocket motor propellant weight will be only 19,621 pounds due to weight constraints for the Shuttle. However, by adjusting the exhaust nozzle on the motor, the average thrust will be increased to 46,198 pounds and the burn time will be 125 seconds.
The second stage consists of an equipment support section and a solid rocket motor. The second stage solid rocket motor has a normal maximum load of 6,000 pounds of propellant generating an average thrust of about 18,200 pounds. The Chandra mission will carry an additional 16 pounds of propellant at a reduced average thrust of 16,350 pounds. The second stage will fire for about 117 seconds.

The equipment support section houses the avionics systems of the Inertial Upper Stage. These systems provide guidance, navigation, control, telemetry, command and data management, reaction control and electrical power. All vital components of the avionics system, along with thrust vector actuators, reaction control thrusters, motor igniter and pyrotechnic stage separation equipment have backups. Once deployed from the Shuttle, the Inertial Upper Stage's computers will send commands to the Chandra X-Ray Observatory. Until spacecraft separation, these commands will assist Chandra in controlling power, safety systems, recorders, propulsion and heaters.

Shuttle Flights Carrying an IUS

MISSION	PAYLOAD	DATE
STS-6	TDRS-A	4/4/83
STS-51J	DSCS III/III	10/3/85
STS-51L	TDRS B	1/28/86
STS-26	TDRS-C	9/29/88
STS-29	TDRS D	3/13/89
STS-30	Magellan	4/4/89
STS-34	Galileo	10/18/89
STS-41	Ulysses	10/6/90
STS-43	TDRS E	8/2/91
STS-44	DSP	11/24/91
STS-54	TDRS F	1/13/93
STS-70	TDRS-G	7/13/95

Airborne Support Equipment

The Inertial Upper Stage and attached Chandra Observatory use airborne support equipment installed in the Shuttle to operate and deploy into space. The Airborne Support Equipment consists of mechanical, avionics and structural equipment located in the orbiter. The structural and mechanical equipment attaches the Inertial Upper Stage and the payload to the orbiter payload bay and provides the mechanisms to elevate the Inertial Upper Stage and the payload and deploy it from the Shuttle. The Airborne Support Equipment avionics provides command and information transfer between the Upper Stage and the Shuttle during payload checkout.

History/Background

Launch, Activation and Checkout

The Chandra X-Ray Observatory, attached to its Inertial Upper Stage will ride into space in the Space Shuttle payload bay. Once on orbit, the Shuttle crew will activate the spacecraft power system, and controllers at the Chandra X-Ray Observatory Control Center in Cambridge, MA, will begin activating and checking out key observatory systems.

Chandra controllers will activate and check out the observatory's computers, activate heaters to control the temperature of observatory systems and initiate venting of Chandra's imaging spectrometer. Controllers will also test the system that will place Chandra in a safe mode should an anomaly occur after deployment and test communications links between the observatory and the ground through Chandra's upper antenna.

Approximately five-and-a-half hours after launch, the Shuttle crew will tilt the Chandra and its Inertial Upper Stage up to 29 degrees. Chandra controllers will then check radio communications links between the observatory and the ground through Chandra's lower antenna.
Following initial activation and checkout of Chandra by the Operations Control Center, the Columbia crew will configure the Inertial Upper Stage for deployment, disconnect umbilicals between the orbiter and payload, and raise the payload to its deployment attitude of 58 degrees above the payload bay.

The crew will then deploy the observatory and its upper stage a little over seven hours after launch before maneuvering the Shuttle to a safe distance from Chandra.

About an hour later, under the watchful eye of controllers at Onizuka Air Force Base, in Sunnyvale, CA, the Inertial Upper Stage will fire its first

stage solid rocket motor for about two minutes, then coast through space for about two minutes more. The first stage will separate, and the second stage will fire for almost two additional minutes. This will place the observatory into a temporary, or transitional, elliptical orbit peaking at 37,200 miles above the Earth and approaching the Earth to within 174 miles.

Chandra's twin solar arrays will then be unfolded, allowing Chandra to begin converting sunlight into 2,350 watts of electrical power to run the observatory's equipment and charge its batteries.

Next, the Inertial Upper Stage will separate from the observatory and Chandra's own propulsion system will gradually move the observatory to its final working orbit of approximately 6,214 by 86,992 miles in altitude. It will take approximately 10 days and five firings of Chandra's own propulsion system to reach its operating orbit.

Over the next two months, the observatory and its instruments will outgas, or vent, residual air and moisture trapped during its assembly on Earth, and controllers will begin the systematic process of turning on and checking out Chandra's science instruments and focusing the observatory, before it is fully commissioned to begin its five-year science mission.

Chandra Major Event Timeline

Activity	Time from launch	Time from IUS Separation
STS-93 Liftoff	00/00:00	
Activate Chandra Onboard Computers	00/02:54	
Chandra Upper Antenna Comm Check	00/03:15	
Chandra Lower Antenna Comm Check	00/05:50	
Chandra/IUS Deploy	00/07/17	
Inertial Upper Stage Burns 1 & 2	00/08:17	
Solar Array Deploy	00/08:46	
Inertial Upper Stage /Chandra Separation	00/09:18	00/00:00
Imaging Spectrometer (ACIS) Power-on	00/17:18	00/08:00
High Resolution Camera (HRC) Power-on	00/18:48	00/09:30
Integral Propulsion System Burn 1	01/21:52	01/12:34
Integral Propulsion System Burn 2	02/23:11	02/13:53
EPHIN Commissioning Sequence Begins	03/02:18	02/17:00
ACIS Checkouts Begin	04/18:48	04/09:30
Shuttle Lands	04/22:56	04/13:49
HRC Door Open		05/02:00
Integral Propulsion System Burn 3		06/10:24
HRC Checkouts Begin		06/17:30
Integral Propulsion System Burn 4		07/16:36
Integral Propulsion System Burn 5		10/07:28
Aspect Camera Activation		10/13:00
ACIS Door Opening Sequence		Day 12
Deactivate Integral Propulsionstem		Day 17
Sunshade Door Open		Day 21
Science Instruments Focus & Calibration Observations Begin		Day 24
High Energy Transmission Grating (HETG) Launch Locks Released		Day 29
Low Energy Transmission Gratin (LETG) Launch Locks Released		Day 37

NOTE: All Chandra event times after IUS separation are approximate.

Chandra's Orbital Profile

Unlike the close-to-Earth, circular orbit of the Hubble Space Telescope, the final orbit of the Chandra X-Ray Observatory will be highly elliptical. At its closest approach to Earth, the observatory will be at an altitude of about 6,200 miles. At its farthest, 87,000 miles, it will travel almost one-third of the way to the Moon. Due to this elliptical orbit, the observatory will circle the Earth every 64 hours, carrying it far outside the belts of radiation that surround our planet. This will allow for 55 hours of uninterrupted observations during each orbit. The radiation, while harmless to life on Earth, could overwhelm the observatory's sensitive instruments. To prevent interference or damage to its instruments, scientific observations will not be taken during periods of interference from Earth's radiation belts.

Observatory Operations

The Smithsonian Astrophysical Observatory in Cambridge, MA, will control science and flight operations of the Chandra X-Ray Observatory under contract to NASA's Marshall Center. The Smithsonian manages Chandra operations through two electronically linked facilities, known collectively as the Chandra X-Ray Observatory Center. The Operations Control Center is located in Kendall Square, and the Science Center is located at the Harvard-Smithsonian Center for Astrophysics on the campus of Harvard University.

The Operations Control Center will be responsible for directing the observatory's mission as it orbits Earth. Commands for executing the observatory plan will be transmitted from the control center to one of three ground stations (in Spain, Australia, or California) that make up NASA's Deep Space Network. The Deep Space Network will relay the commands to the orbiting spacecraft. The spacecraft will carry out the commands by pointing the telescope to the specified targets, and moving the science instruments and gratings in and out of the focus area of the Chandra mirrors.

During launch and on-orbit activation, the control center will be staffed around-the clock by controllers and managers from the Smithsonian, the Marshall Center, and Chandra's prime contractor, TRW. During this period, the center will remain in almost constant communication with the spacecraft.

Once operational, a Smithsonian control center team will interact with the observatory three times a day by receiving science and housekeeping information from its recorders. The team also will send new instructions to the observatory as needed, as well as transmit scientific information from the X-Ray observatory to the Chandra Science Center.

The science center is an important resource for scientists and the public. It will provide researchers with user support that includes science data processing and a science data archive. Other members of the support center team work with NASA and the scientific community to inform the public of discoveries made by scientists using the observatory.

Scientific observations will begin approximately two months after launch. The next three to four months are set aside for Guaranteed Time Observers. They are the telescope scientist, the principal investigators of the teams that built the scientific instruments, and six interdisciplinary scientists chosen in a NASA peer review competition. Seventy percent of the remaining observing time during the first year will be reserved for General Observers. Two hundred General Observer proposals were selected from 800 submissions in a competitive peer review process. About 400 astronomical targets will be observed in the first year

Program History

The Chandra X-Ray Observatory - originally known as the Advanced X-Ray Astrophysics Facility - was initially envisioned as a Space Shuttle-serviceable observatory in low Earth orbit similar to NASA's Hubble Space Telescope. Necessary mirror and instrument technologies were demonstrated in the late 1980s and plans were being made for construction.

In 1992 the observatory was restructured into a less costly program that eliminated on-orbit maintenance and simplified construction.

July 1995 - Grinding and polishing of Chandra's mirrors completed by Raytheon Optical Systems Inc., Danbury, CT.

February 1996 - Coating of the mirrors completed by Optical Coating Laboratory, Inc., Santa Rosa, CA.

December 1996 - Assembly of the mirrors completed by Eastman Kodak Co., Rochester, NY.

March 1997 - Mirror testing and calibration completed at NASA's Marshall Space Flight Center in Huntsville, AL.

May 1997 - Science instrument testing and calibration completed at NASA's Marshall Space Flight Center in Huntsville, AL.

September 1997 - Chandra Operations Control Center opens in Cambridge, MA.

March 1998 - Observatory assembly completed at TRW Space and Electronics Group, Redondo Beach, CA.

July 1998 - Thermal Vacuum Testing was completed at TRW.

December 1998 - Observatory renamed in honor of Indian-American Nobel Laureate Dr. Subrahmanyan Chandrasekhar.

Feb. 4, 1999 - Chandra shipped from TRW to the Kennedy Space Center, FL.

June 2, 1999 - Chandra mated to Inertial Upper Stage at the Kennedy Space Center.

June 18, 1999 - Chandra installed in transportation canister for transfer to the launch pad.

Benefits

Science Program

X-Rays are an invisible form of high-energy light. They are produced in the cosmos when gas is heated to millions of degrees by violent and extreme conditions. Much of the matter in the universe is so hot that it can be observed only with X-Ray telescopes. Flaring stars, exploding stars, black holes, and galaxy clusters, the most massive objects in the universe, are among the many fascinating cosmic phenomena that Chandra X-Ray Observatory is designed to study.

Images from Chandra will show up to fifty times more detail than any previous X-Ray telescope. It is a revolutionary telescope that combines the ability to make sharp images while it measures precisely the energies of X-Rays coming from cosmic sources.

SUPERFLARES, SUPERNOVAE & THE BUILDING BLOCKS FOR LIFE

Observations with Chandra will help scientists better understand the conditions that produce planets and life. Chandra's observations of superflares from young stars will give scientists a better idea of what conditions were like on Earth when the sun was young. Superflares are thousands of times more intense than the largest solar flare ever observed.

The Earth is composed primarily of heavy elements such as carbon, nitrogen, oxygen, silicon and iron. These elements, many of which are necessary for life, are created in the interior of massive stars. Eventually, they are spread throughout space when a massive star runs out of fuel and undergoes a catastrophic explosion called a supernova.

The shell of matter thrown off by the supernova creates a bubble of multimillion degree gas called a supernova remnant. This hot gas will

expand and produce X-radiation for thousands of years. Chandra X-Ray Observatory images will trace the dynamics of the expanding remnant.

When heavy elements present in the hot gas are heated to high temperatures, they produce X-Rays of specific energies. Chandra detectors will precisely measure the energies of these X-Rays and tell how much of each element is present. These X-Ray "color" pictures will reveal the amounts of heavy elements that have been blown off by these stars. They could verify theories for the source of the heavy elements necessary for Earth-like planets and life.

BLACK HOLES & QUASARS

Some of the most intense X-Ray sources in the universe are caused by super-hot gas that is swirling toward a black hole. As the tremendous gravity of a black hole pulls gas and dust particles toward it, the particles speed up and form a rapidly rotating flattened disk. Friction caused by collisions between the particles heats them and they produce X-Rays as their temperatures rise to many millions of degrees.

By accurately determining the energy of individual X-Rays, the Chandra X-Ray Observatory can measure the motion of particles near the event horizon of black holes. This information will allow scientists to test theories about the gravity fields around black holes.

Astrophysicists have proposed that supermassive black holes may explain the mysterious and powerful objects called quasars. These objects radiate as much energy per second as a thousand normal galaxies from a region having a diameter less than a millionth of the size of one galaxy. Because the matter closest to the event horizon of a black hole radiates most of its energy as X-Rays and gamma rays, Chandra will present an unequaled view into the inner workings of these violent cosmic whirlpools.

One of the most intriguing features of supermassive black holes is that they do not suck up all the matter that falls within their sphere of influence. Some of the matter falls inexorably toward the black hole, and some explodes away from the black hole in high-energy jets that move at near the speed of light. Chandra will give new insight into the nature of these enigmatic cosmic jets.

GALAXY CLUSTERS, DARK MATTER & THE UNIVERSE

More than half of all galaxies in the universe are members of groups of galaxies or larger collections of galaxies, called clusters. X-Ray observations have shown that most clusters of galaxies are filled with vast clouds of multimillion degree gas. The mass of this gas is greater than all the stars in all the galaxies in a cluster of a thousand galaxies. Galaxy clusters are the largest and most massive gravitationally bound objects in the universe.

Chandra images of galaxy clusters should significantly advance our understanding of the nature and evolution of the universe in a number of ways.

The X-Ray producing hot gas found in a typical cluster of galaxies presents astronomers with a grand puzzle. Over time this extremely hot gas should escape the cluster since the galaxies and gas do not provide enough gravity to hold it in. Yet the gas remains in clusters of all ages. Scientists have concluded that some unobserved form of matter, called dark matter, is providing the gravity needed to hold the hot gas in the cluster. An enormous amount of dark matter is needed- about three to ten times as much matter as that observed in the gas and galaxies. This means that most of the matter in the universe may be dark matter.

The dark matter could be collapsed stars, planet-like objects, black holes, or exotic subatomic particles that produce no light, and can only be detected through their gravity. Detailed measurements of the size and temperature of the hot gas clouds in galaxy clusters by Chandra X-Ray Observatory could help solve the dark matter mystery.

When combined with observations from microwave telescopes, Chandra images of clusters can be used to measure the distance to the clusters. This distance measurement will give astronomers an independent measurement of the size and age of the universe to compare with measurements made with optical telescopes.

Giant galaxy clusters are formed through the merger of smaller groups and clusters over billions of years. Chandra images will show shock waves produced by these awesome energetic collisions. Estimates of the epoch when clusters were formed in the universe differ greatly, depending on the theory that is adopted. If Chandra discovers massive clusters at great distances, it would challenge theories for the origin and evolution of the universe.

NASA and its Partners

The Chandra X-Ray Observatory program is managed by the Marshall Space Flight Center for the Office of Space Science, NASA Headquarters, Washington, DC. TRW Space and Electronics Group of Redondo Beach, CA, is the prime contractor and has assembled and tested the observatory for NASA. Using glass purchased from Schott Glaswerke, Mainz, Germany, the telescope's mirrors were built by Raytheon Optical Systems Inc., Danbury, CT. The mirrors were coated by Optical Coating Laboratory, Inc., Santa Rosa, CA, and assembled by Eastman Kodak Co., Rochester, NY.

The Chandra X-Ray Observatory Charge-Coupled Device Imaging Spectrometer was developed by Pennsylvania State University, University Park, PA, and the Massachusetts Institute of Technology (MIT), Cambridge.

One diffraction grating was developed by MIT, the other by the Space Research Organization Netherlands, Utrecht, Netherlands, in collaboration with the Max Planck Institute, Garching, Germany. The High Resolution Camera was built by the Smithsonian Astrophysical Observatory. Ball Aerospace & Technologies Corporation of Boulder, CO, developed the aspect camera and the Science Instrument Module.

The Smithsonian Astrophysical Observatory in Cambridge, MA will control science and flight operations. Communications and data links with Chandra will be provided by NASA's Jet Propulsion Laboratory, Pasadena, CA, through the Deep Space Network.

Chandra at a Glance

Mission Duration

Chandra science mission	Approx. 5 yrs
Orbital Activation & Checkout period	Approx. 2 mos

Orbital Data

Inclination	28.5 degrees
Altitude at apogee	86,992 sm
Altitude at perigee	6,214 sm
Orbital period	64 hrs
Observing time per orbital period	Up to 55 hrs

Dimensions

Length - (Sun shade open)	45.3'
Length - (Sun shade closed)	38.7'
Width - (Solar arrays deployed)	64.0'
Width - (Solar arrays stowed)	14.0'

Weights

Dry	10,560 lbs
Propellant	2,153 lbs
Pressurant	10 lbs
Total at launch	12,930 lbs

Integral Propulsion System

Liquid Apogee Engines	4 engines (Only two used at a time)
Fuel	Hydrazine
Oxidizer	Nitrogen tetroxide
Thrust per engine	105 lbs

Electrical Power

Solar Arrays	2 arrays>3 panels each
Power generated	2,350 watts
Electrical power storage	3 batteries 40-ampre-hour nickel hydrogen

Communications

Antennas	2 low-gain antennas
Communication links	Shuttle Payload Interrogator Deep Space Network
Command link	2 kbs per second
Data downlink	32 kbs to 1024 kbs

On-board Data Capture

Method	Solid-state recorder
Capacity	1.8 gbs 16.8 hrs

High Resolution Mirror Assembly

Configuration	4 sets of nested, grazing incidence paraboloid/hyperboloid mirror pairs
Mirror Weight	2,093 lbs
Focal length	33 ft
Outer diameter	4 ft
Length	33.5 in
Material	Zerodur
Coating	600 angstroms of iridium

Attitude Control & Pointing

Reaction wheels	6
Inertial reference units	2
Aspect camera	1.40 deg x 1.40 deg fov

Science Instruments

Charged Coupled Imaging Spectrometer (ACIS)
High Resolution Camera (HRC)
High Energy Transmission Grating (HETG)
Low Energy Transmission Grating (LETG)

IUS

Dimensions

Length	17.0'
Diameter	9.25'

Weights

Stage 1 - Dry	2,566 lbs
Stage 1 - Propellant	19,621 lbs
Stage 1 - Total	22,187 lbs
Stage 2 - Dry	2,379 lbs
Stage 2 - Propellant	6,016 lbs
Stage 2 - Total	8,395 lbs
Total Inertial Upper Stage - At launch	30,582 lbs

Performance

Thrust - Stage 1	46,198 lbs, average
Burn Duration - Stage 1	125 seconds
Thrust - Stage 2	16,350 lbs, average
Burn Duration - Stage 2	117 seconds

Support Equipment Weights

Airborne Support Equipment	5,365 lbs
Other	1,285 lbs
Total Support Equipment	6,650 lbs

Total Payload Weight

Total Chandra/IUS/Support equipment at liftoff	50,162 lbs

Length

Total IUS/Chandra	57.0'

Did you know?

The Chandra X-Ray Observatory is the world's most powerful X-Ray telescope. It has eight times greater resolution and will be able to detect sources more than 20 times fainter than any previous X-Ray telescope.

The Chandra X-Ray Observatory, with its Inertial Upper Stage and support equipment is the largest and heaviest payload ever launched by the Space Shuttle.

The Chandra X-Ray Observatory's operating orbit will take it 200 times higher than the Hubble Space Telescope. Each orbit Chandra will travel one-third of the way to the moon.

The Chandra X-Ray Observatory's resolving power is equal to the ability to read the letters of a stop sign at a distance of 12 miles.

If the State of Colorado were as smooth as the surface of the Chandra X-Ray Observatory mirrors, Pike's Peak would be less than an inch tall.

Another of NASA's incredible time machines, the Chandra X-Ray Observatory will be able to study some quasars as they were 10 billion years ago.

The Chandra X-Ray Observatory will observe X-Rays from clouds of gas so vast that it takes light more than five million years to go from one side to the other.

Although nothing can escape the incredible gravity of a black hole, not even light, the Chandra X-Ray Observatory will be able to study particles up to the last millisecond before they are sucked inside.

Updated: 07/07/1999

Payloads

Commercial Generic Bioprocessing Apparatus

In-Cabin

Prime: Michel Tognini

Backup: Steven Hawley

Principal Investigator: Dr. Louis Stodieck of BioServe Space Technologies, Boulder, Colo.

Overview

The CGBA payload hardware performs two functions: automated processing of biological samples and stowage in a thermally controlled environment. The generic bioprocessing apparatus (GBA) occupies a single middeck locker space and requires 28 volts dc. Stowage is mission specific. Temperature-controlled stowage is provided by the isothermal containment module (ICM), a middeck locker apparatus requiring 28 Vdc.

There are four CGBA configurations consisting of different combinations of hardware: Configuration A consists of the GBA module plus ICM and middeck stowage locker, Configuration B consists of the GBA module plus ICM, and Configuration C consists of the GBA module plus middeck stowage locker. The ICM and/or locker accommodates stowage of biological samples before and after processing in the GBA. Configuration D consists of three GBA-ICM units.

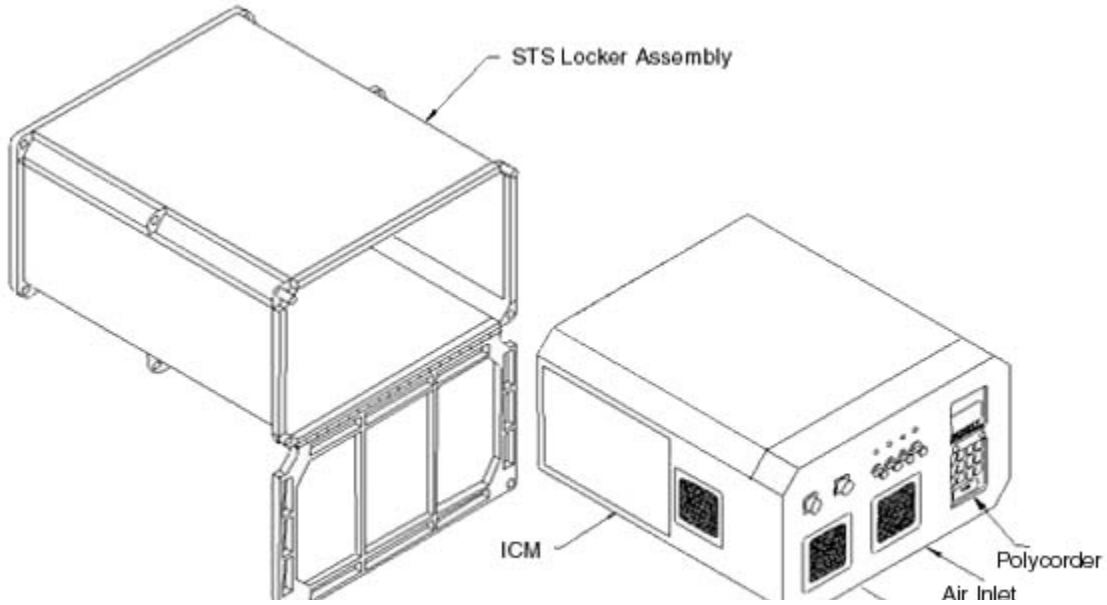

The GBA module is a self-contained mixing and heating module used to process biological fluid samples in microgravity. Up to 120 triple-contained glass syringe fluid samples (in Lexan sheaths) are stored in either the ICM or a middeck locker. These fluids are manually mixed within the syringe and transferred to a sample containment vial that is heated and incubated. At the end of the incubation period, the fluid vials are returned to the ICM or stowage locker.

The ICM maintains a preset temperature environment, controls the activation and termination of the experiment samples, and serves as an interface for crew interaction, control, and data transfer. This incubation/refrigeration module is a lightweight aluminum/insulation-clad structure. The front portion of the housing contains the electronics, thermal, and crew interface subsystems. The rear portion is the isolated, temperature-controlled area that houses the experiment sample containers, e.g., standard GSPs, T-GAPs, auto-GAPs, illuminated culture vessels, or cameras. Each ICM can be fitted with an internal light source. The fluid cooling/heating loops embedded between the aluminum casing and the foam insulation are used to maintain accurate preset temperatures.

For STS-93, the CGBA payload will be flown in Configuration D, which includes three ICM units. One of the three ICM lockers will contain industry-sponsored research projects. The commercial objective in each case is to explore how the altered behavior of a biological process observed in space might be developed into an improved application or new product that will benefit U.S. industry and, as a result,ultimately improve the quality of life for the general public. The four CGBA projects to be flown on STS-93 are summarized below:

Water Purification: Bacterial growth tends to be more difficult to control in space. From data collected in space environments, researchers are exploring methods for improving water purification processes on Earth. Applications for this technology range from small devices designed for backpacking to municipal water treatment facilities. This CGBA project (conducted by Water Technologies Corporation WTC-Ecomasters, Inc., of West St. Paul, Minn.) is focused on developing new water purification resins to combat microorganisms that are becoming resistant to iodine.

Pharmaceutical Screening: The recruitment of leukocytes, or white blood cells, from the blood is critical in fighting infection. Space flight has been shown to suppress the immune system, and studies have identified at least two aspects of leukocyte recruitment that may contribute to this phenomenon. The objective of this experiment is to characterize leukocyte adhesion in microgravity. This research (conducted by Ligocyte

Pharmaceuticals, Inc., of Bozeman, Mont.) may lead to improved pharmaceutical products to treat stress-induced immunosuppression and help prevent the undesirable side effects of current broad-spectrum corticosteroid treatment.

Taxol Production: By producing the anti-cancer drug, Taxol, in the near weightlessness of space, researchers may learn how to improve drug production facilities on Earth. This experiment will explore new compounds that begin cell culture production of Taxol, which could result in more efficient proudction techniques and lower costs for consumers. This research is conducted by EnviroGen, Inc., of Ft. Collins, Colo.

Dynamic Control of Protein Crystallization: Protein crystals, which are of much higher quality when grown in the weightlessness of space, are used to design drugs based on molecular structural analysis. A small entrepreneur (BioSpace International, Inc., of College Park, Md.) is investigating methods to further enhance the quality of space-grown crystals by actively monitoring and controlling the surrounding chemical environment.

Biomacromolecule Crystallization: Protein crystals grown in space may enable researchers to develop new drugs. The higher quality crystals with better three-dimensional structure grown in space may help commercial researchers determine the medical utility of experimental products, such as artificial replacement blood, before costly clinical trials begin. Baxter Hemoglobin Pharmaceuticals of Boulder, Colo., is conducting this experiment.

Two more CGBA ICM lockers to be flown on STS-93 will support science and educational research projects:

NIH.B.1 is an experiment designed to investigate the effects of space flight on neural development in Drosophila melanogaster (fruit fly) larvae. This information may help scientists understand how gravity affects nerve growth and development and how neural connections to muscle fibers work. The experiment is sponsored by the National Institutes of Health (NIH) and NASA Ames Research Center; the principal investigator is from Yale University.

STARS-1 (Space Technology and Research for Students) will investigate the predator/prey relationship between ladybugs and aphids and the chrysalis and wing development of Painted Lady butterflies in space. Farmers may use this information to take advantage of natural pest control methods to protect their crops and avoid chemical pesticides that endanger produce, water, animals, and people. The project is cosponsored by CMAT along with SPACEHAB, Inc. A number of U.S. middle and high schools, one high school from Santiago, Chile, and an educational publisher called J. Weston Walch, are involved with the ladybug experiment. Albany High School's High-Tech program is performing the butterfly experiment.

The CGBA payload was modified to accommodate various special requirements for these collaborative projects, such as independent thermal control for eight different sample containers in the NIH.B.1 locker and real-time video image downlink of the STARS-1 samples.

History/Background

The CGBA payload was designed and built by BioServe faculty, staff, and students. BioServe is a NASA Center for Space Commercialization, jointly located at the Aerospace Engineering Sciences Department of the University of Colorado and the Department of Biology at Kansas State University.

Various configurations of CGBA have flown on 12 previous shuttle missions, beginning with STS-50 in 1992 and including two 4-month stays aboard the Russian Mir space station. Current CGBA technology is being advanced and refined for future operation on the International Space Station.

Benefits

The interdisciplinary nature of this research offers unique educational opportunities for undergraduate and graduate students. The goal of improving applications and developing new products benefits U.S. industry, enhances quality of life for the public, and propels the field of biotechnology into new frontiers.

Updated: 07/07/1999

Payloads

Gelation of Sols: Applied Microgravity Research

In-Cabin

Prime: Cady Coleman
Backup: Michel Tognini

Overview

The Gelation of Sols: Applied Microgravity Research (GOSAMR) payload is a middeck materials processing experiment that will investigate the influence of microgravity on the processing of gelled sols--dispersions of solid particles in a liquid often referred to as colloids--which are used in the production of advanced ceramics materials. Stoke's law predicts that there will be more settling of the denser and larger-sized particulates in Earth's gravity as compared to the differentiation that should occur in a microgravity environment.

The GOSAMR experiment will attempt to form precursors for advanced ceramic materials by using chemical gelation (disrupting the stability of a sol and forming a semi-solid gel). These precursor gels will be returned to 3M Science Research Laboratories, dried, and fired to temperatures ranging from 900 to 2,900 degrees F to complete the fabrication of the ceramic composites. These composites will then be evaluated to determine if processing in space resulted in better structural uniformity and superior physical properties.

On STS-93, 50-100 samples (5 cc each) will be generated by varying the particle sizes and loadings, the length of gelation times, and the sol sizes. The chemical components will consist of either colloidal silica sols doped with diamond particles or colloidal alumina sols doped with zirconia particulates. Both sols will also be mixed with a gelling agent of aqueous ammonium acetate.

About a month before launch, the GOSAMR payload is prepacked into a middeck stowage locker and surrounded with half an inch of isolator material. The experiment contains an internal battery source and uses no power from the shuttle orbiter. The payload is designed to operate at ambient cabin temperature and pressure to ensure scientific success of the experiment, maintaining temperatures above 40 degrees F and below 120 degrees F at all times.

The GOSAMR container consists of a back cover, five identical and independent apparatus modules holding ten mixing systems, and a front cover. The modules and covers comprise a common sealed apparatus container that provides an outermost level of chemical containment. The front cover contains two ambient temperature-logging devices, two purge ports for venting and backfilling the container with inert gas, and the electrical feedthrough between the sealed apparatus and the control housing. The control housing at the front of the payload contains power switches for payload activation, indicator lights for payload status, and a test connector used during ground-based checkout. Once the payload is installed in the locker, the control housing will be the only portion of the payload accessible to the flight crew.

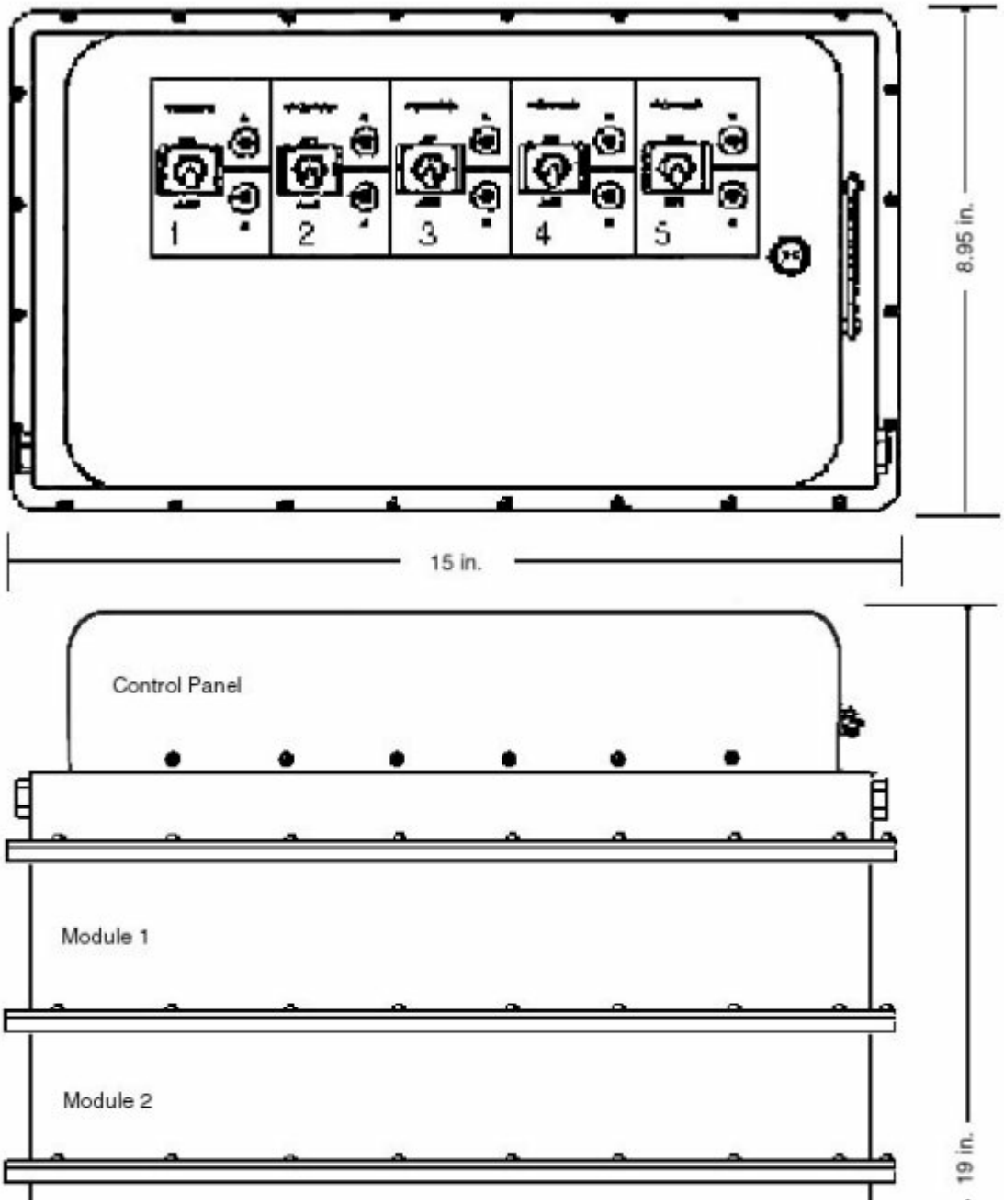

Each of GOSAMR's five modules has two mixing systems with eight double syringes (5 cc each) containing one of the two chemical components. Prior to on-orbit activation, the two components will be kept isolated from each other by a seal between the syringe couplers. The coupled syringes in each assembly will contain a gelling agent (either aqueous ammonium acetate or nitric acid) in one syringe and one of the two chemical components in the other.

Once on orbit, a crew member will sequentially activate the five power switches on the control housing. When the payload is activated, a pilot light for each module will be illuminated, indicating that mixing has begun and that the syringe-to-syringe seal has been broken. The sample mixing process for each system will last about 10 to 20 seconds; and once the mixing cycle is complete, an internal limit switch will automatically stop each mixing system.

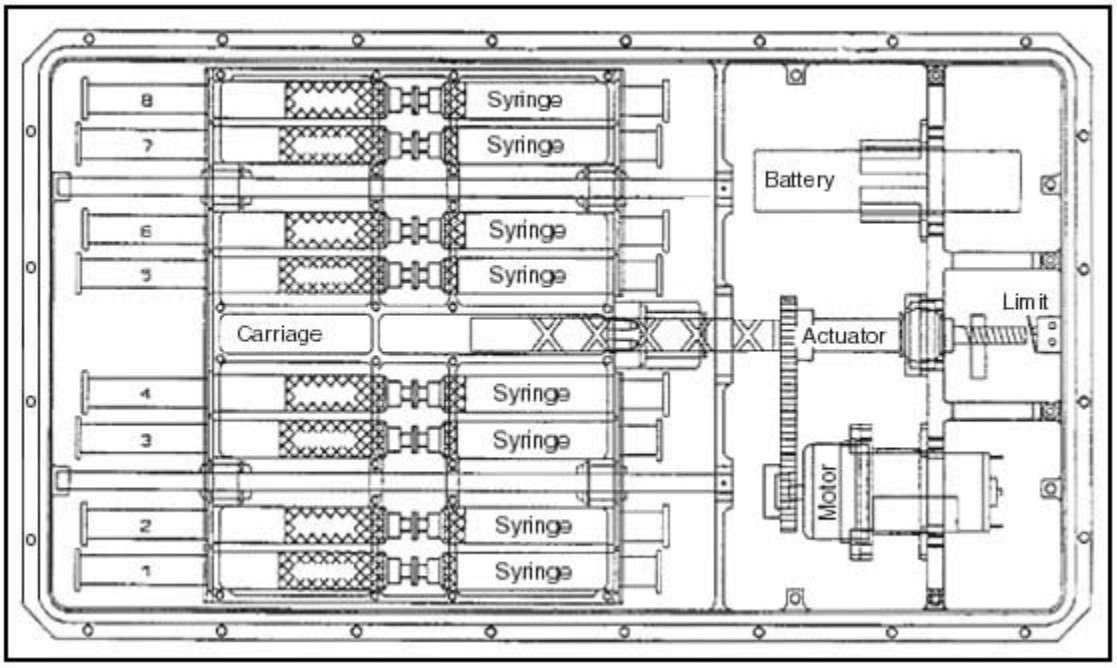

The flight crew will monitor the experiment status by observing the control-housing indicator lights, which will be illuminated during the motor-driven mixing of each system. The pilot lights will be extinguished once the mixing is complete, and a crew member will deactivate each module. The payload will require no further crew interaction. However, physical changes in the samples will continue passively and unattended for a minimum of 24 hours in the microgravity environment. Total crew interaction will be less than 1 hour, and only during this period will the locker door be open.

After landing, the payload will be removed from the orbiter during normal destowage operations and resumed to 3M within 24 hours where postflight processing and analyses will be conducted on space- and ground-processed samples to ascertain the differences in physical structure and properties.

History/Background

The GOSAMR payload, flown under the sponsorship of a joint endeavor agreement between NASA's Office of Commercial Programs and 3M's Science Research Laboratories, St. Paul, Minn., involves chemical gelation to form precursors for advanced ceramics materials that may have a more uniform structure, finer grain size, and superior physical properties than similar materials produced on Earth. GOSAMR previously flew on STS-42 in January 1992.

Benefits

The potential commercial impact of GOSAMR-applied research on enhanced ceramic composite materials will be in the areas of abrasives and fracture-resistant materials. 3M currently sells film coated with diamond-loaded silica beads for polishing computer disk drive heads and VCR heads. Zirconia-toughened alumina is a premium performance abrasive grit and functions extremely well as a cutting tool for the machining of metals. The performance of these materials may be enhanced by improving their structural uniformity through processing in space.

Updated: 07/07/1999

Payloads

Lightweight Flexible Solar Array Hinge

In-Cabin

Prime: Michel Tognini

Backup: Cady Coleman

Overview

The Lightweight Flexible Solar Array Hinge (LFSAH) consists of several hinges fabricated from shape-memory alloys, which allow controlled, shockless deployment of solar arrays and other spacecraft appendages. LFSAH will demonstrate the deployment capability of a number of hinge configurations on STS-93.

The experiment is contained in a single enclosure that requires 28-volt dc external power. The hinges are actuated by serial activation of front-panel switches. LFSAH operations are monitored and displayed on front-panel digital displays. Data are logged on a self-contained system and videotaped on a standard 8-mm camcorder.

Hinges are the primary mechanism used to deploy spacecraft solar arrays, which are folded and stowed for launch. Once the spacecraft is released into orbit, these solar array systems are deployed, or unfolded, and used to generate power for the spacecraft. Flight testing of the hinges provides an opportunity to evaluate various configurations in a realistic environment and allows investigators to verify mechanical design data and evaluate the dynamic properties of the hinges.

LFSAH consists of six hinges made of shape-memory alloys (SMA). The key advantages of SMA hinges over other hinges include low-shock controlled deployment, fewer parts, lighter weight, higher reliability, and ease of production and assembly. The LFSAH experiment on STS-93 will test this technology in a weightless environment before it is used in future spacecraft, including the New Millennium Earth Observer 1 (EO-1) experiment and the Deep Space 3 (DS3) space vehicle.

The Lightweight Flexible Solar Array Hinge experiment is sponsored by the Air Force Research Lab, Kirtland AFB, N.M. The experiment is integrated and flown under the direction of the DOD Space Test Program Office at Johnson Space Center in Houston, Tex.

History/Background

The new hinges could lower spacecraft costs and prevent damage during deployment in space.

Updated: 07/07/1999

Payloads

Micro-Electromechanical Systems

In-Cabin

Prime: Steven Hawley
Backup: Cady Coleman

Overview

The Micro-Electromechanical Systems experiment examines the performance of a suite of devices under launch, microgravity, and reentry conditions. These devices include accelerometers, gyros, and environmental and chemical sensors. The MEMS payload is self-contained and requires activation and deactivation only. All experiment operations are monitored and recorded by integrated components. Power, however, is required from just before ascent through deorbit.

The MEMS payload uses one middeck locker with a modified door (front panels removed). An accelerometer and mounting plate will be attached to the inside back of the middeck locker before the payload is installed. A power cable will be connected to the MEMS locker during installation.

Micro-electromechanical systems have already found their way into our lives (air bag triggers, combustion control sensors, ink-jet printer heads, etc.). Electronic fabrication technology, micromolding, and laser processing are being used to carve miniature machines out of silicon and integrate them with electronics to create MEMS. Because of their low weight, low power consumption, and low volume, MEMS devices are extremely attractive for potential spacecraft applications. They are also very reliable, low cost, and somewhat autonomous from other systems.

This program, sponsored by the Air Force Research Lab, Kirtland AFB, N.M., is the first systematic flight testing of MEMS to confirm their advantages for space applications. The experiment is basically a testbed for microdevices that have specific uses in space.

Several types of microaccelerometers and microgyros that can be used to monitor large spacecraft or navigate miniature spacecraft will be tested during the launch phase and on orbit to see if such conditions affect their performance. Chemical microsensors will monitor the middeck environment for traces of potentially harmful gases such as carbon dioxide, methane,

and hydrogen. Subminiature arrays of solid rocket motors being developed for attitude control will be tested for configuration stability during launch and material stability in orbit. Very high density nanoelectronic devices will be tested for operational stability in the enhanced radiation environment of space, and the performance of a microarray of thermal control elements will be evaluated.

These devices represent functions (navigation and control, sensing, propulsion, computation, thermal control) that are required for spacecraft of any size. They were chosen for this experiment because the near-term goal is to exploit the advantages offered by MEMS for all spacecraft.

History/Background

The MEMS payload is integrated and flown under the direction of the DOD Space Test Program Office at Johnson Space Center in Houston, Tex. This is its first flight.

Benefits

Micro-electromechanical systems offer great potential benefits for spacecraft application: low weight, low power consumption, low volume, high reliability, low cost, and a certain degree of autonomy.

Updated: 07/07/1999

Payloads

Midcourse Space Experiment

Prime: Jeffrey Ashby
Backup: Eileen Collins

Overview

The objective of the Midcourse Space Experiment (MSX) is to fire the orbiter thrusters (orbital maneuvering and primary reaction control systems) in space and use the sophisticated sensors of the orbiting MSX satellite to collect ultraviolet, infrared, and visible light data of the event.

The MSX spacecraft features an advanced multispectral imaging capability that is used to gather data on test targets and space background phenomena. This information will aid designers of future space- and ground-based surveillance and tracking systems that require simultaneous wideband optical data on midcourse missile flight, the trajectory phase between burnout and reentry. For the first time, researchers can observe missile target signatures against Earth limb, auroral, and celestial cluttered backgrounds.

In addition, MSX will investigate the composition and dynamics of Earth's atmosphere to increase our understanding of the environment. MSX can be pointed so that all its instruments simultaneously view the Earth's atmosphere in any allowed direction. This represents an unparalleled scientific opportunity to study the composition, dynamics, and energetics of the atmosphere, including small annual changes in such chemicals as ozone, carbon dioxide, and chlorofluorocarbons. Global atmospheric changes following major solar disturbances and environmental events like volcanic eruptions, forest fires, and agricultural burnoffs also can be monitored.

The MSX spacecraft includes three major sections. The versatile electronics section features state-of-the-art attitude control, power, and command and telemetry systems, including rotatable solar arrays, nickel-hydrogen battery power, steerable X-band antennas, and 108-Gbit data storage. The midsection graphite-epoxy truss supports a large cryogenic Dewar, which contains frozen hydrogen at approximately 8.5 kelvins (1 kelvin equals -273 degrees Celsius, the temperature at which water freezes). The truss thermally isolates the heat-sensitive instrument section from the much

warmer spacecraft bus. The instrument section houses 11 optical sensors, which are precisely aligned so that target activity can be viewed simultaneously by multiple sensors. The primary instruments are a space infrared imaging telescope, ultraviolet and visible imagers and spectrographic imagers, a space-based visible instrument, an on-board signal and 86 data processor, and reference objects deployed from MSX for calibrating its instruments.

There are three major categories of MSX tests: plume observations, resident space object (RSO) observations, and acquisition and tracking tests. Plume observations require the firing of either an orbital maneuvering system engine or a minimum of two primary reaction control system engines. The engines fire into the ram, into the wake, or at an angle to the orbiter's velocity vector. RSO tests require the orbiter to maneuver to a specified attitude and remain there throughout the test.

During the mission, MSX sensors will obtain ultraviolet, infrared, and visible light data of orbiter thruster firings under controlled conditions. Data collection will be scheduled during any encounter opportunity when orbiter and crew support activities can be planned within primary payload or mission objectives. There are no unique altitude or inclination requirements, and no on-board flight hardware is involved.

The Sensor Technology Directorate of the BMDO has overall responsibility for MSX. Johns Hopkins University Applied Physics Laboratory serves as systems engineer and technical adviser.

History/Background

The MSX satellite was launched from Vandenberg Air Force Base in California on April 24, 1996, into a 99-degree-inclination, 485-nautical-mile orbit. Its design lifetime is four years, but its infrared telescope is limited by its coolant supply to 18 to 20 months of operation. Approximately 50 percent of MSX's weight and power is allocated to instrument use.

Benefits

The MSX observatory, a Ballistic Missile Defense Organization (BMDO) project, offers major benefits for both the defense and civilian sectors. MSX will observe firings of the orbiter maneuvering thrusters and the orbiter itself. With a solid heritage in the successful Delta series, MSX represents the first system demonstration of technology in space to identify and track ballistic missiles during their midcourse flight phase. The satellite will also collect valuable data about changes in the Earth's atmosphere.

Updated: 07/07/1999

Payloads

Plant Growth Investigations in Microgravity 1

In-Cabin

Prime:	Cady Coleman	**Principal Investigator:**	Dr. Robert Ferl, University of Florida, Gainesville
Backup:	Steven Hawley	**Project Scientist:**	Dr. William Knott, NASA/Kennedy Space Center

Overview

The PGIM-1 experiment will use genetically engineered plants to monitor the space flight environment for stresses that affect plant growth and gene expression. Because plants cannot get up and move away from stressful situations, they have developed exquisite sensing mechanisms that monitor their environment and direct effective physiological responses to harmful conditions.

One response is to change gene expression patterns, which allows plants to produce new suites of enzymes that allow them to accommodate an environmental perturbation. For the PGIM-1 payload, mouse-ear cress plants (*arabidopsis thaliana*) have been engineered with a reporter gene that provides visual clues to gene expression changes that will occur during space flight. When these engineered plants experience a stress, the reporter gene will be activated. The reporter gene's activity will be revealed by staining the plants.

Thirty-six nearly mature plants will be housed in the plant growth facility in a middeck locker. The PGF will facilitate crew access to the plants on orbit as well as provide all of the growing conditions required by the plants. Light, temperature, and carbon dioxide levels can be controlled, and a full set of sensors will monitor all of the growth conditions in the PGF. During the flight, samples will be grown in a duplicate PGF on the ground for comparison with the space-grown plants.

On the first day after launch and on the day before reentry, a crew member will open the PGF to harvest some of the plants and place them in fix tubes preloaded with reporter gene stain. The crew member will examine the plants for reporter gene activity.

Benefits

Investigators have learned from previous space flight experiments that plants do adapt to stress on orbit. Through the use of the reporter genes, PGIM-1 will seek to identify the sources of on-orbit stress and provide insight into methods of alleviating those stresses through better engineering of flight hardware or through genetic engineering of the plants.

Updated: 07/07/1999

Payloads

Shuttle Amateur Radio Experiment II

In-Cabin

Prime: Michel Tognini
Backup: Eileen Collins

Overview

The Shuttle Amateur Radio Experiment is designed to demonstrate the feasibility of contact between the shuttle and ground-based amateur radio operators, often called "hams." SAREX also serves as an educational tool, allowing school children around the world to learn about space firsthand by speaking directly to astronauts aboard the shuttle. Ham radio operators communicate with the shuttle via VHF-FM voice transmission, a mode that makes contact widely available without the purchase of expensive equipment.

The SAREX-II payload comes in three configurations: Configuration A for communicating with amateur radio stations within the orbiter line of sight (LOS) in one of three modes--voice, SSTV, or data; Configuration B for voice communication only; and Configuration C for communicating in either voice or data mode with amateur stations within orbiter LOS. The C-configuration can also operate in the attended mode for voice communication and either attended or automatic mode for data communication.

For STS-93, SAREX-II will use Configuration C-Q, which is the same as Configuration C with the addition of a new digital signal processor (DSP) unit installed between the headset and the SAREX interface module. The DSP unit is an electronic box that performs digital signal processing of the downlink and uplink audio transmissions to enhance the voice clarity and quality.

SAREX II C-Q includes all the Configuration C components: hand-held FM transceiver, interface module, payload and general support computer (PGSC), spare battery set, window antenna, packet module, headset assembly, personal recorder, and the required cable assemblies. The packet module contains a power supply and packet terminal node controller (TNC). The power supply provides power for the TNC and the hand-held transceiver. The TNC interconnects with a radio transceiver that enables

data to and from the computer to be transmitted to and received from other amateur radio stations.

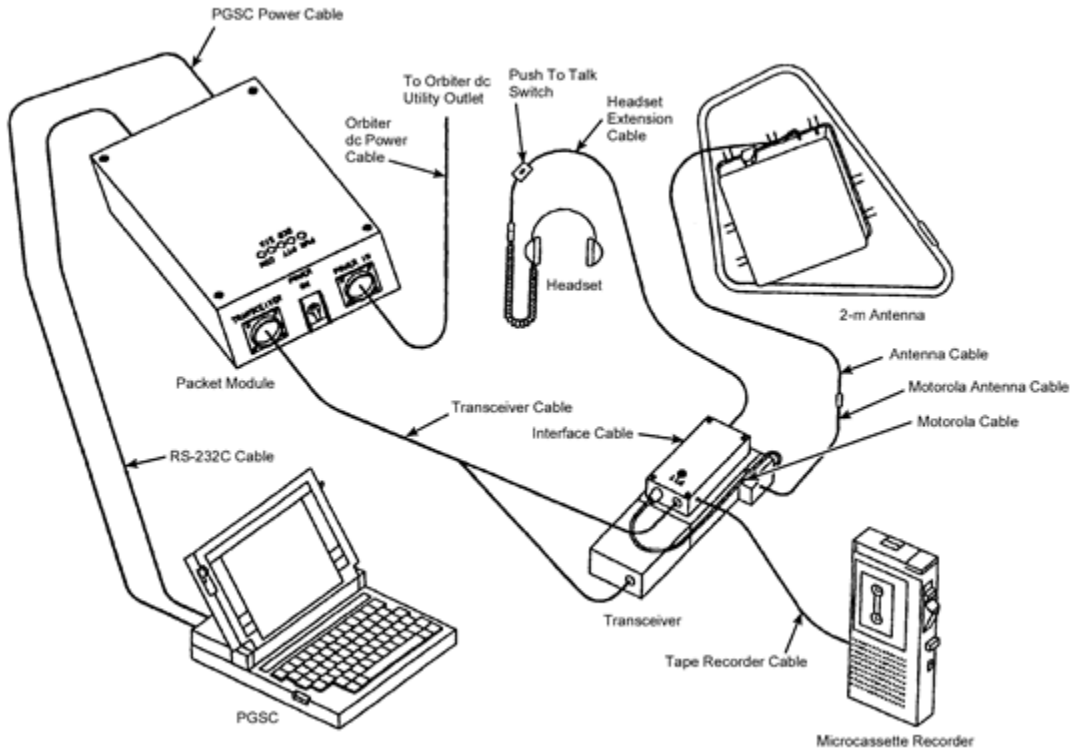

Five schools will be participating in SAREX-II communications during STS-93:

Memorial Middle School in Pharr, Tex.
Ponaganset Middle School in North Scituate, R.I.
Awty International School in Houston, Tex.
Buzz Aldrin Elementary School in Reston, Va.
Osceola Elementary School in Ormond Beach, Fla.

History/Background

SAREX has flown on 19 previous shuttle missions.

The new DSP Quintronics box flying on this mission was developed by a company called Spacetec, which was purchased and became the Space Operations Division of Zeltech.

Benefits

SAREX allows amateur radio operators to participate in shuttle missions and serves as an educational stimulus by giving schools direct access to astronauts in space. The new digital signal processor will enhance voice communications by eliminating background noise.

Updated: 07/07/1999

Payloads

Shuttle Ionospheric Modification With Pulsed Localized Exhaust

Prime: Jeffrey Ashby

Principal Investigator: Dr. Paul Bernhardt, Naval Research Laboratory

Backup: Eileen Collins

Overview

SIMPLEX is actually a "simple experiment" to study the complex interactions of exhaust vapors with the background atmosphere. This understanding will someday help us to detect, identify, and track the flight of unfriendly space vehicles with instruments that characterize and interpret the vehicle's exhaust plume.

The firing of the shuttle's orbital maneuvering system (OMS) jets causes very high frequency (VHF) radar echoes. The SIMPLEX investigation will seek to determine the source of those VHF echoes.

The Earth is surrounded by a layer of electrons and ions called the ionosphere, which ranges in altitude from 30 to 250 miles. This layer becomes disturbed when gaseous materials released in engine exhaust, like those from the space shuttle OMS, burn in the ionosphere. The gases react chemically with the ions to produce ion beams, which move at orbital speeds, leaving a trail of turbulence in their wake. Eventually, the ions recombine with electrons to produce an ionospheric hole covering an area of 30 by 30 miles or greater.

The flight crew will fire the orbiter's OMS thrusters to create ionospheric disturbances that will be observed by SIMPLEX radars at four sites on Earth: Arecibo, Puerto Rico; Kwajalein, Marshall Islands; Milestone Hill, Mass.; and Jicamarca, Peru. A low-level laser at Arecibo will also observe the effects of the thruster firings on the ionosphere.

The SIMPLEX engine burns are scheduled over each radar site. The radar will send up radio wave pulses that scatter off of the electrons in the ionosphere. Radar will monitor both the turbulence produced by the ion beams and the ultimate reduction in electron density that causes the ionospheric hole.

The SIMPLEX payload has no flight hardware. The principal investigator will analyze the collected data to determine the effects of orbital kinetic energy on ionospheric irregularities and to understand the processes involved when exhaust materials are vented by the orbiter.

History/Background

SIMPLEX is integrated and flown under the direction of the DOD Space Test Program Office at Johnson Space Center in Houston, Tex. STS-93 is the fourth flight of SIMPLEX.

Benefits

Information from SIMPLEX will someday help the U.S. detect, identify, and track the flight of unfriendly space vehicles.

Updated: 07/07/1999

Payloads

Southwest Ultraviolet Imaging System

In-Cabin

60 lb. lbs.

Prime: Steven Hawley

Backup: Michel Tognini

Principal Investigator: Dr. Alan Stern, Southwest Research Institute, San Antonio, Texas

Project Scientist: Dr. David Slater, Southwest Research Institute, San Antonio, Texas

Overview

The Southwest Ultraviolet Imaging System (SWUIS) is an innovative telescope/charge-coupled device (CCD) camera system that operates from inside the shuttle cabin. SWUIS is used to image planets and other solar system bodies in order to explore their atmospheres and surfaces in the ultraviolet (UV) region of the spectrum, which astronomers value for its diagnostic power.

SWUIS will fly its second space shuttle mission on STS-93. This mission will focus on obtaining UV imagery of an array of planetary and astrophysical targets. The specific objectives of SWUIS during this flight are to (i) obtain the mid-UV albedo (reflected light) from Mercury for the first time and search for spatial variations across the planet; (ii) record mid-UV dynamic movies of the upper atmospheres of Venus and Jupiter; (iii) establish the morphological appearance and phase curve of the moon in the mid-UV for the first time; (iv) search for vulcanoids, a putative population of small, asteroid-like bodies residing interior to Mercury's orbit; and (v) obtain mid-UV dynamic movies of the airglow along the Earth's limb (in camera science mode [CSM]).

SWUIS is stored in the orbiter middeck lockers during launch and entry and is assembled for on-orbit operations. Video data from the SWUIS intensified charge-coupled device (ICCD) camera are recorded on the camcorder and also downlinked to the SWUIS ground personnel located in the JSC Payload Operations Control Center (POCC)

SWUIS presently has two hardware configurations for space shuttle missions: (1) telescope science mode (TSM) and (2) camera science mode. TSM uses a telescope for high-spatial resolution imaging of faint object

targets such as planets, comets, and space debris. CSM uses a wide-field camera lens for imaging bright targets that occupy larger swaths of the sky such as aurora and lightning sprites. Both TSM and CSM hardware are sensitive to UV, visible (VIS), and infrared (IR) wavelengths.

The SWUIS TSM hardware is composed of three major elements: the telescope, the ICCD camera, and the electronics that provides power and control of the ICCD camera. In addition to these major components, SWUIS uses a custom-built mounting bracket that couples the telescope to the space shuttle side-hatch window for UV observations; a telescope optical coupling assembly (TOCA) that physically and optically couples the ICCD camera to the telescope and which can hold up to three imaging filters in the optical path; a filter caddy that holds the filters and lenses used in the TOCA; and associated power and data cables. The data from the ICCD camera are an analog video signal that is recorded on-board the shuttle with a portable camcorder and which can be downlinked from the shuttle to the ground for real-time assessment.

The telescope, built by Questar Corporation, is a custom 7-inch-diameter (18 cm) Maksutov-Cassegrain design ruggedized for space flight use. It incorporates a UV transmissive front-end corrector lens made of magnesium fluoride, and mirror optical coatings composed of aluminum overcoated with magnesium fluoride for enhanced sensitivity at UV/VIS/IR wavelengths (200-1000 nm). The telescope incorporates a small 6x30 mm finder telescope that allows the shuttle mission specialist to make fine pointing adjustments to the telescope during target acquisition. The telescope is hard mounted to the side-hatch window in the shuttle mid-deck area via a custom two-axis mounting bracket with manual slow motion controls for fine-pointing. A light shield made of Pyrell foam is placed between the window and the telescope to block unwanted cabin light from entering the telescope. The telescope and mounting bracket weigh approximately 30 lb.

A variety of ruggedized ICCD cameras, built by Xybion Inc., which are sensitive to UV, VIS, and near-IR (NIR) wavelengths, can fly as part of the SWUIS hardware complement. The wavelength sensitivity of each ICCD camera is determined by the type of photocathode material used in the camera's design. The UV/VIS version uses a Generation II photocathode with a sensitivity in the 180-820 nm wavelength range. A second VIS version uses an extended blue Generation III photocathode with high sensitivity between 450 and 910 nm. The NIR version has high sensitivity between 600 and 1000 nm. The output of the ICCD camera is a standard RS-170 video signal at an interlaced frame rate of 60 Hz with 370 lines of horizontal resolution. The camera weighs 2.75 lb. and draws about 5 watts.

The TOCA is a mechanical interface between the telescope and the ICCD camera. It is designed to hold both imaging filters and lenses. The effective focal length of the SWUIS TSM system can be varied between

105 and 257 cm for a FOV range between 0.3 and 0.6 deg (full cone). The power interface box (PIB) provides power conditioning from the shuttle orbiter's video interface unit to the ICCD camera. The PIB also has manual adjustment controls of the ICCD camera's internal sensitivity (gain) and video output signal. The video output signal is buffered by the PIB to allow multiple data paths to camcorders, monitors, and to the shuttle's video downlink system. During shuttle missions, SWUIS data are recorded on board with a portable camcorder and can also be sent to the ground via satellite link.

SWUIS TSM mode provides astronomers and planetary scientists with a small but highly capable space telescope. Although far less sensitive than the Hubble Space Telescope, SWUIS has its own advantages. These include a far wider FOV and the capability to study objects that are much closer to the sun, such as the inner planets and comets.

The SWUIS CSM configuration is very similar to the TSM mode except the ICCD camera is used with a UV transmissive wide-field lens, instead of the main telescope. A mini-TOCA is used to hold filter combinations. The CSM can be mounted to any of the shuttle windows including the side-hatch window and the nine flight deck windows, using a Bogan bracket camera mount. The wide-field lens assembly provides a FOV of approximately 12.5 deg (full cone).

History/Background

SWUIS made its first flight on STS-85 in August 1997. On that mission, SWUIS obtained over 400,000 images of the Hale-Bopp Comet at a time when the Hubble Space Telescope could not observe the comet because it was lost in the glare of the sun. These images have already revealed important insights into the comet's water and dust production rates as it left the sun on its return to the Oort Cloud of comets, 10,000 times as far away as Pluto.

Benefits

Although small, the sensitive SWUIS system has some unique attributes that make it a valuable complement to more expensive space observatories such as the Hubble Space Telescope. Among these attributes are SWUIS's unusually wide field of view (FOV) (up to 30 times Hubble's) and its ability to observe objects much closer to the sun than most space observatories. This latter capability allows SWUIS to explore the inner solar system, which few other instruments can.

Updated: 07/07/1999

Payloads

Space Tissue Loss

In-Cabin

Prime: Steven Hawley
Backup: Jeffrey Ashby

Overview

The Space Tissue Loss hardware will be used on STS-93 to support two sets of experiments. STL-A will support the CCM experiment with micromolecular investigations to validate models for tissue loss in space. STL-B will support the BRIC-12 experiment by observing cells in culture with a video microscope imaging system to record near-real-time interactions of detecting and inducing cellular responses (macromorphological changes).

Experiment activities can be performed without any crew intervention other than initiation of the experiment at the beginning of on-orbit payload operations and termination of the experiment before deorbit preparation. STL operates continuously from prelaunch through postlanding.

STL is integrated and flown under the direction of the DOD Space Test Program Office at Johnson Space Center in Houston, Tex.

History/Background

This is the ninth flight of STL hardware.

Updated: 07/07/1999

DTO/DSO/RMEs

Individual Susceptibility to Postflight Orthostatic Intolerance
DSO 496

Prime: Cady Coleman
Backup: Jeffrey Ashby

Overview

Susceptibility to postflight orthostatic intolerance is highly individual. Some astronauts are little affected; others have severe symptoms. Women are more often affected than men. The goal of this DSO is to discover the mechanisms responsible for these differences in order to customize countermeasure protocols.

History/Background

It has been well documented that space flight significantly alters cardiovascular function. One of the most important changes from a crew safety standpoint is postflight loss of orthostatic tolerance, which causes astronauts to have difficulty walking independently and induces lightheadedness or fainting. These may impair their ability to leave the orbiter after it lands. Recent evidence indicates that postflight autonomic dysfunction contributes to orthostatic intolerance.

Updated: 07/07/1999

DTO/DSO/RMEs

Integrated Measurement of the Cardiovascular Effects of Space Flight

DSO 631

Prime: Michel Tognini

Backup:

Overview

The purpose of this DSO is to assess the stroke volume changes during early exposure to microgravity, assess the flow redistribution through the body during the acceleration phases of launch, and quantify the peripheral vasomotor response during the launch and entry into microgravity phase.

Updated: 07/07/1999

DTO/DSO/RMEs

Interaction of the Space Shuttle Launch and Entry Suit and Sustained Weightlessness on Egress Locomotion

DSO 331

In-Cabin

Prime: Steven Hawley

Backup: Michel Tognini

Overview

This DSO will identify the impact of the launch and entry suit (LES)/advanced crew escape suit (ACES) and sustained weightlessness on the mechanical efficiency of astronauts' egress locomotion as measured by oxygen consumption and gait alteration; identify the impact of the LES/ACES on physiological responses as measured by oxygen consumption, increased body temperature, heart rate, and ventilatory equivalent; and determine if crew members can sustain a uniform speed for 400 meters when they leave the orbiter.

Crew members participating in this DSO will attach the egress monitor assembly to themselves before they put on the LES/ACES for reentry. As soon after the flight as possible, they will walk 400 meters on a treadmill at 3.5 mph with the LES/ACES on.

History/Background

One important unanswered question about space flight is whether astronauts wearing the launch and entry suit are able to leave the orbiter at wheel stop in an emergency and walk to safety. Past investigations have demonstrated that astronauts moving at even a medium pace while wearing the LES experience an increase in energy expenditure of as much as 55 percent. Other studies have indicated that even short-duration space flights can reduce astronauts' aerobic capacity and cause a significant loss of strength and function, especially in astronauts' lower limbs and back. The combined effect of reduced muscle function and aerobic capacity may be great enough to negatively affect astronauts' ability to safely leave the orbiter at wheel stop in an emergency.

Updated: 07/07/1999

DTO/DSO/RMEs

Monitoring Latent Virus Reactivation and Shedding in Astronauts

DSO 493

In-Cabin

Prime:

Backup:

Overview

This DSO will attempt to determine the frequency of induced reactivation of latent viruses, latent virus shedding, and clinical disease after exposure to the physical, physiological, and psychological stressors associated with space flight.

Saliva samples are collected from the participating astronauts every other day from six to four months before the launch to establish shedding profiles. Ten milliliters of blood and urine are collected during a routine preflight physical. During the flight, saliva specimens are collected once each day and stored for postflight evaluation.

History/Background

Space flight-induced alterations of immune response will become increasingly important on long-duration missions, including the possible reactivation and shedding (dissemination) of latent viruses. One type of latent virus is herpes simplex type 1 (HSV-1), which infects 70-80 percent of all adults. Its manifestation is classically associated with cold sores, pharyngitis, and tonsillitis, and it is usually acquired through contact with the saliva, skin, or mucous membranes of an infected individual. However, many recurrences are asymptomatic, resulting in shedding of the virus.

Updated: 07/07/1999

DTO/DSO/RMEs

Space Flight Immune Function

DSO 498

In-Cabin

Prime:

Backup:

Overview

Astronauts working and living in relatively crowded conditions in the closed environment of spacecraft for longer and longer missions face an increasing risk of contracting infectious diseases. The human immune system plays a pivotal role in the prevention of infectious illnesses, and the effects of space flight on the immune response are not fully understood.

History/Background

It is suspected that exposure to the weightlessness of space alters the essential functions of neutrophils, monocytes, and cytotoxic cells (lymphokine-activated and natural killer cells). This DSO will characterize the effects of space flight on selected immune elements that are important in maintaining an effective defense against infectious agents. The roles of neutrophils, monocytes, and cytotoxic cells, which are important elements of the immune response, have not been studied adequately. These studies will complement ongoing and previous space immunology investigations.

This DSO will prove or disprove the hypothesis that space flight alters the immune response to infectious agents by analyzing neutrophils and monocytes and assessing cytotoxic cells and cytokine production before and after the mission.

Updated: 07/07/1999

DTO/DSO/RMEs

Crosswind Landing Performance
DTO 805

Prime: Eileen Collins
Backup: Jeffrey Ashby

Overview

This DTO will demonstrate the capability to land the orbiter manually with a 10- to 15-knot crosswind.

Updated: 07/07/1999

DTO/DSO/RMEs

Digital Video Camcorder Demonstration
DTO 631

Prime: Eileen Collins
Backup: Michel Tognini

Overview

This experiment will test and demonstrate state-of-the-art digital camcorder and video recorder technology that can complement or replace the aging, obsolete Canon analog camcorders currently used on the shuttle program. The long-term objective is to select a replacement that has the same or superior capabilities as the Canon's. It is expected that a digital camcorder will significantly improve the quality of shuttle video.

A primary objective of DTO 631 is to demonstrate that a digital video camcorder or recorder is easy to use on orbit, has interfaces that are identical to those of the standard camcorder, and is a beneficial addition to the shuttle program.

This is the first of two planned flights of this DTO.

History/Background

Although analog camcorders have performed adequately on most shuttle flights, they lack the resolution and quality available in other formats and cannot be replaced. New state-of-the-art digital video recording formats are now becoming readily available.

Updated: 07/07/1999

DTO/DSO/RMEs

High-Definition Television Camcorder Demonstration
DTO 700-17A
In-Cabin

Prime: Cady Coleman
Backup: Jeffrey Ashby

Overview

The objectives of this DTO are to verify that integrating this new capability with the existing system causes no engineering anomalies, determine how well this technology meets NASA's goal and any changes required or desired in the operational hardware, compare the shuttle's current analog video capability and the High-Definition Television (HDTV) format, and provide shuttle HDTV source material to the news media and broadcasters in a format that can be produced in the U.S. HDTV format.

The analog-to-digital comparison will be produced by recording the same scenes simultaneously with one of the shuttle analog camcorders and the HDTV camcorder and with a payload bay still camera and the HDTV camcorder. The still camera's images will be recorded on a videotape recorder.

Various scenes that are typical sources of video on shuttle missions will be shot with the HDTV camcorder to assess its performance. The goal is to capture images of dynamic events such as a payload deployment or observe lightning and other atmospheric phenomena.

After the mission, NASA will compare size measurements of objects from each image format with known standards and make qualitative assessments of color and the ability of an interpreter to distinguish contaminants, damage, and discoloration of external surfaces on the basis of color.

Only one flight of this DTO is planned.

History/Background

The United States is moving from analog television to the digital format adopted by the Federal Communications Commission. In order to provide images in this new format, NASA needs to upgrade its shuttle video system. A minimal upgrade of existing shuttle hardware will be a first step toward giving the shuttle program some digital television capability.

Updated: 07/07/1999

DTO/DSO/RMEs

Shuttle Radar Topography Mission Fly Casting Maneuver
DTO 260

Prime: Eileen Collins
Backup: Jeffrey Ashby

Overview

The Shuttle Radar Topography Mission (SRTM) fly casting technique is designed to minimize structural loading of the 60-meter extendible boom antenna during the STS-99 mission in September. During this experiment, Columbia's crew will conduct a sequence of orbiter jet firings that will minimize the dynamics of the orbiter during trim burns. This investigation of the optimum settings and timing of trim burns must be conducted--before the flight of the SRTM--to verify the on-orbit feasibility of the ground-developed technique. Only one flight of this experiment is planned.

Updated: 07/07/1999

DTO/DSO/RMEs

Treadmill Vibration Isolation and Stabilization System
RME 1318

Prime: Steven Hawley
Backup: Michel Tognini

Overview

An in-flight evaluation of the Treadmill Vibration Isolation and Stabilization (TVIS) system must be performed to guarantee successful operation as an exercise device, while meeting International Space Station (ISS) load transmission requirements, prior to installation as an exercise countermeasures device on ISS.

Updated: 07/07/1999

Media Assistance

NASA Television Transmission

NASA Television is available through the GE2 satellite system which is located on Transponder 9C, at 85 degrees west longitude, frequency 3880.0 MHz, audio 6.8 MHz.

The schedule for television transmissions from the orbiter and for mission briefings will be available during the mission at Kennedy Space Center, FL; Marshall Space Flight Center, Huntsville, AL; Dryden Flight Research Center, Edwards, CA; Johnson Space Center, Houston, TX; and NASA Headquarters, Washington, DC. The television schedule will be updated to reflect changes dictated by mission operations.

Status Reports

Status reports on countdown and mission progress, on-orbit activities and landing operations will be produced by the appropriate NASA newscenter

Briefings

A mission press briefing schedule will be issued before launch. During the mission, status briefings by a flight director or mission operations representative and when appropriate, representatives from the payload team, will occur at least once each day. The updated NASA television schedule will indicate when mission briefings are planned.

Internet Information

Information is available through several sources on the Internet. The primary source for mission information is the NASA Shuttle Web, part of the World Wide Web. This site contains information on the crew and its mission and will be updated regularly with status reports, photos and video clips throughout the flight. The NASA Shuttle Web's address is:

http://shuttle.nasa.gov

If that address is busy or unavailable, Shuttle Information is available through the Office of Space Flight Home Page:

http://www.hq.nasa.gov/osf/

General information on NASA and its programs is available through the NASA Home Page and the NASA Public Affairs Home Page:

http://www.nasa.gov

or

http://www.nasa.gov/newsinfo/index.html

Information on other current NASA activities is available through the Today@NASA page:

http://www.nasa.gov/today.html

The NASA TV schedule is available from the NTV Home Page:

http://www.nasa.gov/ntv

Status reports, TV schedules and other information also are available from the NASA headquarters FTP (File Transfer Protocol) server, ftp.hq.nasa.gov. Log in as anonymous and go to the directory /pub/pao. Users should log on with the user name "anonymous" (no quotes), then enter their E-mail address as the password. Within the /pub/pao directory there will be a "readme.txt" file explaining the directory structure:

* Pre-launch status reports (KSC): **ftp.hq.nasa.gov/pub/pao/statrpt/ksc**
* Mission status reports (KSC): **ftp.hq.nasa.gov/pub/pao/statrpt/jsc**
* Daily TV Schedules: **ftp.hq.nasa.gov/pub/pao/statrpt/jsc/tvsked.**

NASA Spacelink, a resource for educators, also provides mission information via the Internet. Spacelink may be accessed at the following address:

http://spacelink.nasa.gov

Access by Compuserve

Users with Compuserve accounts can access NASA press releases by typing "GO NASA" (no quotes) and making a selection from the categories offered.

Updated: 07/07/1999

Media Contacts

NASA PAO CONTACTS

June Malone Marshall Space Flight Center Huntsville, AL June.Malone@msfc.nasa.gov	External Tank/SRBs/SSMEs	256/544-0034
Bruce Buckingham Kennedy Space Center , FL bruce.buckingham-1@ksc.nasa.gov	Launch Processing, KSC Landing Information	407/867-2468
Eileen Hawley Johnson Space Houston, TX eileen.hawley1@jsc.nasa.gov	Mission Operations/Astronauts	281/483-5111
Dwayne Brown, NASA Headquarters, Washington, DC dwayne.brown@hq.nasa.gov	Policy/Management	202/358-1726

Updated: 07/07/1999

Shuttle Reference and Data

Shuttle Abort History

RSLS Abort History:

(STS-41 D) June 26, 1984
The countdown for the second launch attempt for Discovery's maiden flight ended at T-4 seconds when the orbiter's computers detected a sluggish valve in main engine #3. The main engine was replaced and Discovery was finally launched on August 30, 1984.

(STS-51 F) July 12, 1985
The countdown for Challenger's launch was halted at T-3 seconds when on-board computers detected a problem with a coolant valve on main engine #2. The valve was replaced and Challenger was launched on July 29, 1985.

(STS-55) March 22, 1993
The countdown for Columbia's launch was halted by on-board computers at T-3 seconds following a problem with purge pressure readings in the oxidizer preburner on main engine #2 Columbia's three main engines were replaced on the launch pad, and the flight was rescheduled behind Discovery's launch on STS-56. Columbia finally launched on April 26, 1993.

(STS-51) August 12, 1993
The countdown for Discovery's third launch attempt ended at the T-3 second mark when on-board computers detected the failure of one of four sensors in main engine #2 which monitor the flow of hydrogen fuel to the engine. All of Discovery's main engines were ordered replaced on the launch pad, delaying the Shuttle's fourth launch attempt until September 12, 1993.

(STS-68) August 18, 1994
The countdown for Endeavour's first launch attempt ended 1.9 seconds before liftoff when on-board computers detected higher than acceptable readings in one channel of a sensor monitoring the discharge temperature of the high pressure oxidizer turbopump in main engine #3. A test firing of the engine at the Stennis Space Center in Mississippi on September 2nd confirmed that a slight drift in a fuel flow meter in the engine caused a slight increase in the turbopump's temperature. The test firing also confirmed a slightly slower start for main engine #3 during the pad abort, which could have contributed to the higher temperatures. After Endeavour was brought back to the Vehicle Assembly Building to be outfitted with three replacement engines, NASA managers set October 2nd as the date for Endeavour's second launch attempt.

Abort to Orbit History:

(STS-51 F) July 29, 1985
After an RSLS abort on July 12, 1985, Challenger was launched on July 29, 1985. Five minutes and 45 seconds after launch, a sensor problem resulted in the shutdown of center engine #1, resulting in a safe "abort to orbit" and successful completion of the mission.

Updated: 07/07/1999

Shuttle Reference and Data

Shuttle Abort Modes

RSLS ABORTS

These occur when the onboard Shuttle computers detect a problem and command a halt in the launch sequence after taking over from the Ground Launch Sequencer and before Solid Rocket Booster ignition.

ASCENT ABORTS

Selection of an ascent abort mode may become necessary if there is a failure that affects vehicle performance, such as the failure of a space shuttle main engine or an orbital maneuvering system. Other failures requiring early termination of a flight, such as a cabin leak, might also require the selection of an abort mode.

There are two basic types of ascent abort modes for space shuttle missions: **intact aborts** and **contingency aborts**. Intact aborts are designed to provide a safe return of the orbiter to a planned landing site. Contingency aborts are designed to permit flight crew survival following more severe failures when an intact abort is not possible. A contingency abort would generally result in a ditch operation.

INTACT ABORTS

There are four types of intact aborts: abort to orbit (ATO), abort once around (AOA), transoceanic abort landing (TAL) and return to launch site (RTLS).

Return to Launch Site

The RTLS abort mode is designed to allow the return of the orbiter, crew, and payload to the launch site, Kennedy Space Center, approximately 25 minutes after lift-off.

The RTLS profile is designed to accommodate the loss of thrust from one space shuttle main engine between lift-off and approximately four minutes 20 seconds, at which time not enough main propulsion system propellant remains to return to the launch site.

An RTLS can be considered to consist of three stages-a powered stage, during which the space shuttle main engines are still thrusting; an ET

separation phase; and the glide phase, during which the orbiter glides to a landing at the Kennedy Space Center. The powered RTLS phase begins with the crew selection of the RTLS abort, which is done after solid rocket booster separation. The crew selects the abort mode by positioning the abort rotary switch to RTLS and depressing the abort push button. The time at which the RTLS is selected depends on the reason for the abort. For example, a three-engine RTLS is selected at the last moment, approximately three minutes 34 seconds into the mission; whereas an RTLS chosen due to an engine out at lift-off is selected at the earliest time, approximately two minutes 20 seconds into the mission (after solid rocket booster separation).

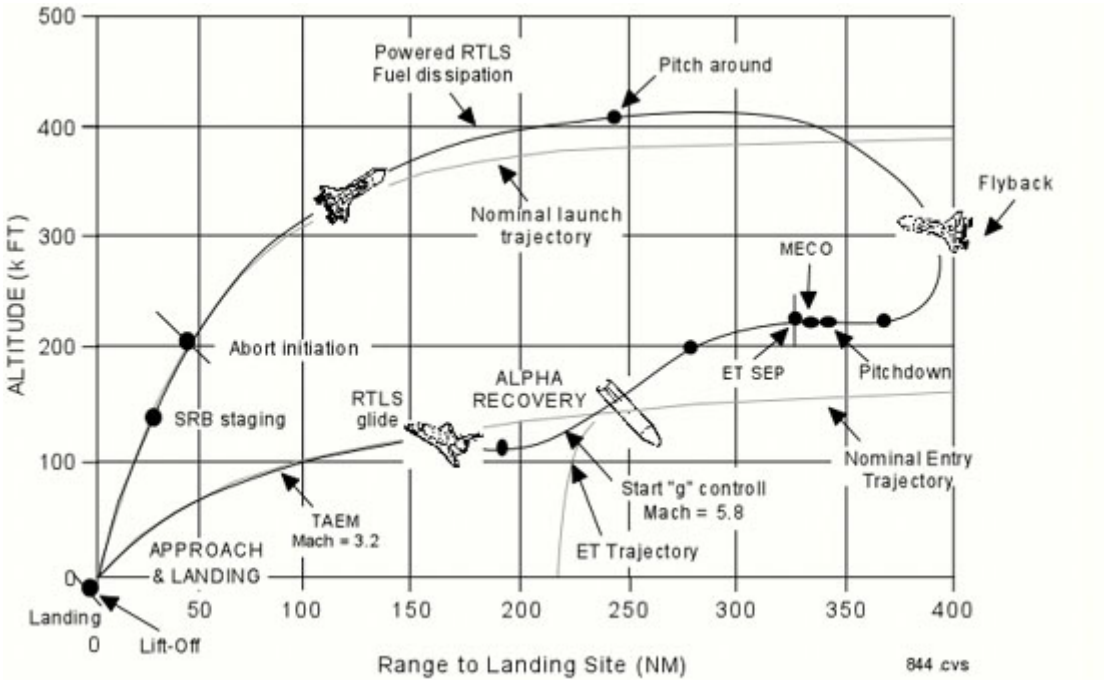

After RTLS is selected, the vehicle continues downrange to dissipate excess main propulsion system propellant. The goal is to leave only enough main propulsion system propellant to be able to turn the vehicle around, fly back towards the Kennedy Space Center and achieve the proper main engine cutoff conditions so the vehicle can glide to the Kennedy Space Center after external tank separation. During the downrange phase, a pitch-around maneuver is initiated (the time depends in part on the time of a space shuttle main engine failure) to orient the orbiter/external tank configuration to a heads up attitude, pointing toward the launch site. At this time, the vehicle is still moving away from the launch site, but the space shuttle main engines are now thrusting to null the downrange velocity. In addition, excess orbital maneuvering system and reaction control system propellants are dumped by continuous orbital maneuvering system and reaction control system engine thrustings to improve the orbiter weight and center of gravity for the glide phase and landing.

The vehicle will reach the desired main engine cutoff point with less than 2 percent excess propellant remaining in the external tank. At main engine cutoff minus 20 seconds, a pitch-down maneuver (called powered

pitch-down) takes the mated vehicle to the required external tank separation attitude and pitch rate. After main engine cutoff has been commanded, the external tank separation sequence begins, including a reaction control system translation that ensures that the orbiter does not recontact the external tank and that the orbiter has achieved the necessary pitch attitude to begin the glide phase of the RTLS.

After the reaction control system translation maneuver has been completed, the glide phase of the RTLS begins. From then on, the RTLS is handled similarly to a normal entry.

Transoceanic Abort Landing

The TAL abort mode was developed to improve the options available when a space shuttle main engine fails after the last RTLS opportunity but before the first time that an AOA can be accomplished with only two space shuttle main engines or when a major orbiter system failure, for example, a large cabin pressure leak or cooling system failure, occurs after the last RTLS opportunity, making it imperative to land as quickly as possible.

In a TAL abort, the vehicle continues on a ballistic trajectory across the Atlantic Ocean to land at a predetermined runway. Landing occurs approximately 45 minutes after launch. The landing site is selected near the nominal ascent ground track of the orbiter in order to make the most efficient use of space shuttle main engine propellant. The landing site also must have the necessary runway length, weather conditions and U.S. State Department approval. Currently, the three landing sites that have been identified for a due east launch are Moron,, Spain; Dakar, Senegal; and Ben Guerur, Morocco (on the west coast of Africa).

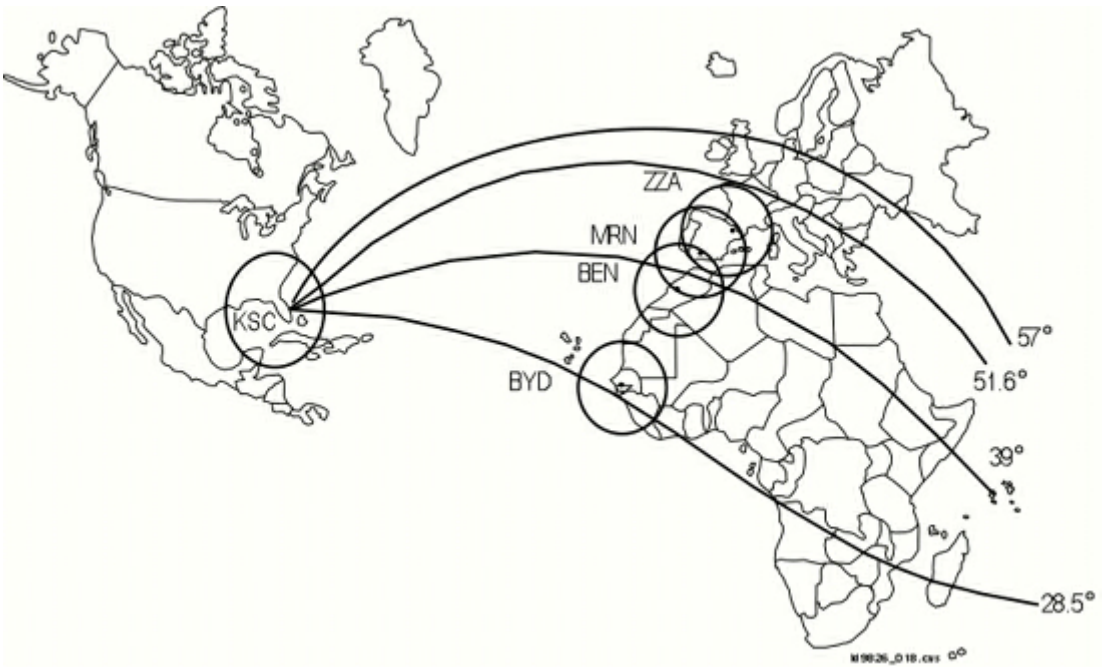

To select the TAL abort mode, the crew must place the abort rotary switch in the TAL/AOA position and depress the abort push button before main engine cutoff. (Depressing it after main engine cutoff selects the AOA abort mode.) The TAL abort mode begins sending commands to steer the vehicle toward the plane of the landing site. It also rolls the vehicle heads up before main engine cutoff and sends commands to begin an orbital maneuvering system propellant dump (by burning the propellants through the orbital maneuvering system engines and the reaction control system engines). This dump is necessary to increase vehicle performance (by decreasing weight), to place the center of gravity in the proper place for vehicle control, and to decrease the vehicle's landing weight.

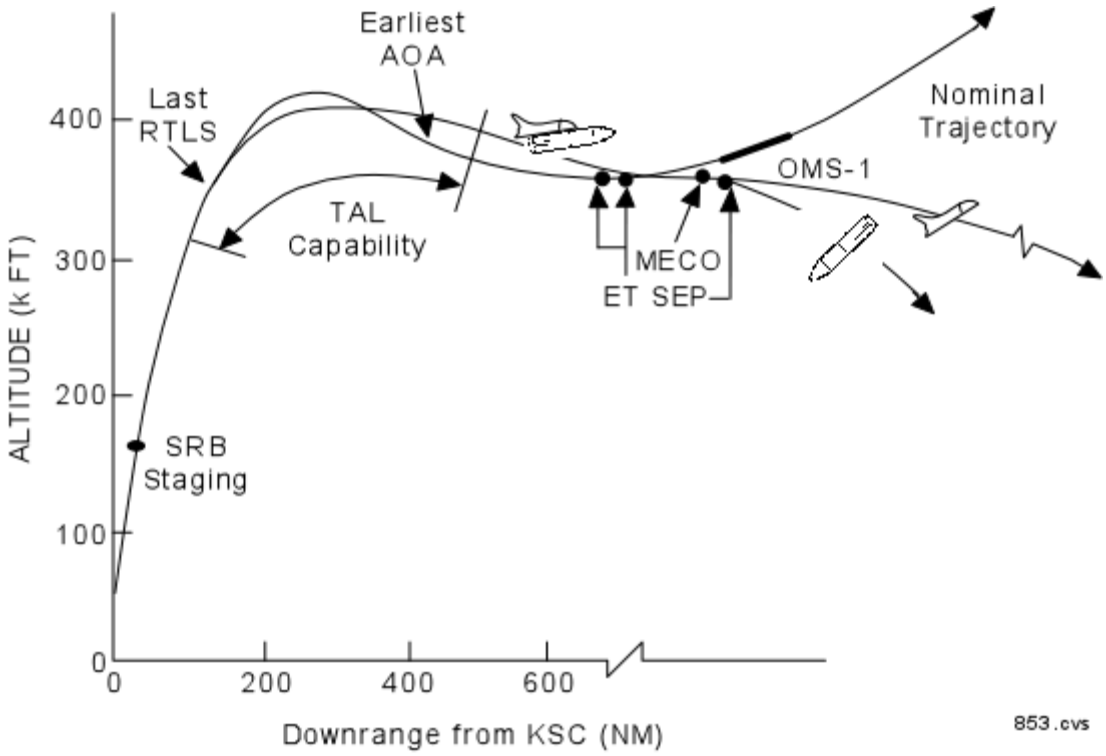

TAL versus Nominal Ascent

TAL is handled like a nominal entry.

Abort to Orbit

An ATO is an abort mode used to boost the orbiter to a safe orbital altitude when performance has been lost and it is impossible to reach the planned orbital altitude. If a space shuttle main engine fails in a region that results in a main engine cutoff under speed, the Mission Control Center will determine that an abort mode is necessary and will inform the crew. The orbital maneuvering system engines would be used to place the orbiter in a circular orbit.

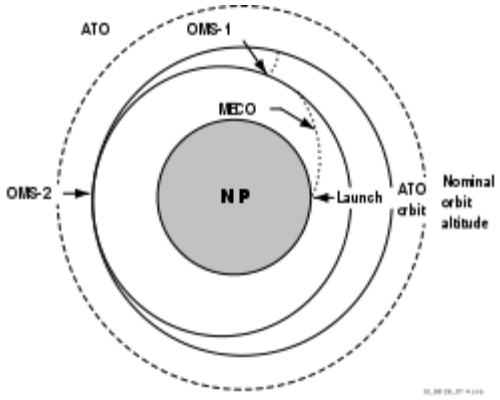

Abort Once Around

The AOA abort mode is used in cases in which vehicle performance has been lost to such an extent that either it is impossible to achieve a viable orbit or not enough orbital maneuvering system propellant is available to accomplish the orbital maneuvering system thrusting maneuver to place the orbiter on orbit and the deorbit thrusting maneuver. In addition, an AOA is used in cases in which a major systems problem (cabin leak, loss of cooling) makes it necessary to land quickly. In the AOA abort mode, one orbital maneuvering system thrusting sequence is made to adjust the post-main engine cutoff orbit so a second orbital maneuvering system thrusting sequence will result in the vehicle deorbiting and landing at the AOA landing site (White Sands, N.M.; Edwards Air Force Base; or the Kennedy Space Center.. Thus, an AOA results in the orbiter circling the Earth once and landing approximately 90 minutes after lift-off.

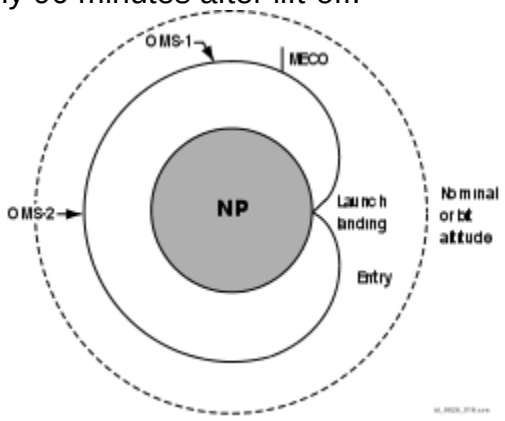

After the deorbit thrusting sequence has been executed, the flight crew flies to a landing at the planned site much as it would for a nominal entry.

CONTINGENCY ABORTS

Contingency aborts are caused by loss of more than one main engine or

failures in other systems. Loss of one main engine while another is stuck at a low thrust setting may also necessitate a contingency abort. Such an abort would maintain orbiter integrity for in-flight crew escape if a landing cannot be achieved at a suitable landing field.

Contingency aborts due to system failures other than those involving the main engines would normally result in an intact recovery of vehicle and crew. Loss of more than one main engine may, depending on engine failure times, result in a safe runway landing. However, in most three-engine-out cases during ascent, the orbiter would have to be ditched. The in-flight crew escape system would be used before ditching the orbiter.

ABORT DECISIONS

There is a definite order of preference for the various abort modes. The type of failure and the time of the failure determine which type of abort is selected. In cases where performance loss is the only factor, the preferred modes would be ATO, AOA, TAL and RTLS, in that order. The mode chosen is the highest one that can be completed with the remaining vehicle performance.

In the case of some support system failures, such as cabin leaks or vehicle cooling problems, the preferred mode might be the one that will end the mission most quickly. In these cases, TAL or RTLS might be preferable to AOA or ATO. A contingency abort is never chosen if another abort option exists.

The Mission Control Center-Houston is prime for calling these aborts because it has a more precise knowledge of the orbiter's position than the crew can obtain from onboard systems. Before main engine cutoff, Mission Control makes periodic calls to the crew to tell them which abort mode is (or is not) available. If ground communications are lost, the flight crew has onboard methods, such as cue cards, dedicated displays and display information, to determine the current abort region.

Which abort mode is selected depends on the cause and timing of the failure causing the abort and which mode is safest or improves mission success. If the problem is a space shuttle main engine failure, the flight crew and Mission Control Center select the best option available at the time a space shuttle main engine fails.

If the problem is a system failure that jeopardizes the vehicle, the fastest abort mode that results in the earliest vehicle landing is chosen. RTLS and TAL are the quickest options (35 minutes), whereas an AOA requires approximately 90 minutes. Which of these is selected depends on the time of the failure with three good space shuttle main engines.

The flight crew selects the abort mode by positioning an abort mode switch and depressing an abort push button.

Shuttle Reference and Data

Space Shuttle External Tank

The external tank contains the liquid hydrogen fuel and liquid oxygen oxidizer and supplies them under pressure to the three space shuttle main engines in the orbiter during lift-off and ascent. When the SSMEs are shut down, the ET is jettisoned, enters the Earth's atmosphere, breaks up, and impacts in a remote ocean area. It is not recovered.

The largest and heaviest (when loaded) element of the space shuttle, the ET has three major components: the forward liquid oxygen tank, an unpressurized intertank that contains most of the electrical components, and the aft liquid hydrogen tank. The ET is 153.8 feet long and has a diameter of 27.6 feet.

The ET is attached to the orbiter at one forward attachment point and two aft points. In the aft attachment area, there are also umbilicals that carry fluids, gases, electrical signals and electrical power between the tank and the orbiter. Electrical signals and controls between the orbiter and the two solid rocket boosters also are routed through those umbilicals.

Liquid Oxygen Tank

The liquid oxygen tank is an aluminum monocoque structure composed of a fusion-welded assembly of preformed, chem-milled gores, panels, machined fittings and ring chords. It operates in a pressure range of 20 to 22 psig. The tank contains anti-slosh and anti-vortex provisions to minimize liquid residuals and damp fluid motion. The tank feeds into a 17-inch-diameter feed line that conveys the liquid oxygen through the intertank, then outside the ET to the aft right-hand ET / orbiter disconnect umbilical. The 17-inch-diameter feed line permits liquid oxygen to flow at approximately 2,787 pounds per second with the SSMEs operating at 104 percent or permits a maximum flow of 17,592 gallons per minute. The liquid oxygen tank's double-wedge nose cone reduces drag and heating, contains the vehicle's ascent air data system (for nine tanks only) and serves as a lightning rod. The liquid oxygen tank's volume is 19,563 cubic feet. It is 331 inches in diameter, 592 inches long and weighs 12,000 pounds empty.

Intertank

The intertank is a steel / aluminum semimonocoque cylindrical structure with flanges on each end for joining the liquid oxygen and liquid hydrogen tanks. The intertank houses ET instrumentation components and provides

an umbilical plate that interfaces with the ground facility arm for purge gas supply, hazardous gas detection and hydrogen gas boiloff during ground operations. It consists of mechanically joined skin, stringers and machined panels of aluminum alloy. The intertank is vented during flight. The intertank contains the forward SRB-ET attach thrust beam and fittings that distribute the SRB loads to the liquid oxygen and liquid hydrogen tanks. The intertank is 270 inches long, 331 inches in diameter and weighs 12,100 pounds.

Liquid Hydrogen Tank

The liquid hydrogen tank is an aluminum semimonocoque structure of fusion-welded barrel sections, five major ring frames, and forward and aft ellipsoidal domes. Its operating pressure range is 32 to 34 psia. The tank contains an anti-vortex baffle and siphon outlet to transmit the liquid hydrogen from the tank through a 17-inch line to the left aft umbilical. The liquid hydrogen feed line flow rate is 465 pounds per second with the SSMEs at 104 percent or a maximum flow of 47,365 gallons per minute. At the forward end of the liquid hydrogen tank is the ET / orbiter forward attachment pod strut, and at its aft end are the two ET / orbiter aft attachment ball fittings as well as the aft SRB-ET stabilizing strut attachments. The liquid hydrogen tank is 331 inches in diameter, 1,160 inches long, and has a volume of 53,518 cubic feet and a dry weight of 29,000 pounds.

ET Thermal Protection System

The ET thermal protection system consists of sprayed-on foam insulation and premolded ablator materials. The system also includes the use of phenolic thermal insulators to preclude air liquefaction. Thermal isolators are required for liquid hydrogen tank attachments to preclude the liquefaction of air-exposed metallic attachments and to reduce heat flow into the liquid hydrogen.

ET Hardware

Each propellant tank has a vent and relief valve at its forward end. This dual-function valve can be opened by ground support equipment for the vent function during prelaunch and can open during flight when the ullage (empty space) pressure of the liquid hydrogen tank reaches 38 psig or the ullage pressure of the liquid oxygen tank reaches 25 psig.

The liquid oxygen tank contains a separate, pyrotechnically operated, propulsive tumble vent valve at its forward end. At separation, the liquid oxygen tumble vent valve is opened, providing impulse to assist in the separation maneuver and more positive control of the entry aerodynamics of the ET.

There are eight propellant-depletion sensors, four each for fuel and oxidizer. The fuel-depletion sensors are located in the bottom of the fuel tank. The oxidizer sensors are mounted in the orbiter liquid oxygen feed line manifold downstream of the feed line disconnect. During SSME thrusting, the orbiter general-purpose computers constantly compute the instantaneous mass of the vehicle due to the usage of the propellants. Normally, main engine cutoff is based on a predetermined velocity; however, if any two of the fuel or oxidizer sensors sense a dry condition, the engines will be shut down.

The locations of the liquid oxygen sensors allow the maximum amount of oxidizer to be consumed in the engines, while allowing sufficient time to shut down the engines before the oxidizer pumps cavitate (run dry). In addition, 1,100 pounds of liquid hydrogen are loaded over and above that required by the 6-1 oxidizer / fuel engine mixture ratio. This assures that MECO from the depletion sensors is fuel-rich; oxidizer-rich engine shutdowns can cause burning and severe erosion of engine components.

Four pressure transducers located at the top of the liquid oxygen and liquid hydrogen tanks monitor the ullage pressures.

Each of the two aft external tank umbilical plates mate with a corresponding plate on the orbiter. The plates help maintain alignment among the umbilicals. Physical strength at the umbilical plates is provided by bolting corresponding umbilical plates together. When the orbiter GPCs command external tank separation, the bolts are severed by pyrotechnic devices.

The ET has five propellant umbilical valves that interface with orbiter umbilicals: two for the liquid oxygen tank and three for the liquid hydrogen tank. One of the liquid oxygen tank umbilical valves is for liquid oxygen, the other for gaseous oxygen. The liquid hydrogen tank umbilical has two valves for liquid and one for gas. The intermediate-diameter liquid hydrogen umbilical is a recirculation umbilical used only during the liquid hydrogen chill-down sequence during prelaunch.

The ET also has two electrical umbilicals that carry electrical power from the orbiter to the tank and the two SRBs and provide information from the SRBs and ET to the orbiter.

A swing-arm-mounted cap to the fixed service structure covers the oxygen tank vent on top of the ET during the countdown and is retracted about two minutes before lift- off. The cap siphons off oxygen vapor that threatens to form large ice on the ET, thus protecting the orbiter's thermal protection system during launch.

ET Range Safety System

A range safety system provides for dispersing tank propellants if necessary. It includes a battery power source, a receiver / decoder, antennas and ordnance.

Various parameters are monitored and displayed on the flight deck display and control panel and are transmitted to the ground.

The contractor for the external tank is Martin Marietta Aero space, New Orleans, La. The tank is manufactured at Michoud, La. Motorola, Inc., Scottsdale, Ariz., is the contractor for range safety receivers.

Updated: 07/07/1999

Shuttle Reference and Data

Space Shuttle Rendezvous Maneuvers

COMMON SHUTTLE RENDEZVOUS MANEUVERS

OMS-1 (Orbit insertion) - Rarely used ascent abort burn

OMS-2 (Orbit insertion) - Typically used to circularize the initial orbit following ascent, completing orbital insertion. For ground-up rendezvous flights, also considered a rendezvous phasing burn

NC (Rendezvous phasing) - Performed to hit a range relative to the target at a future time

NH (Rendezvous height adjust) - Performed to hit a delta-height relative to the target at a future time

NPC (Rendezvous plane change) - Performed to remove planar errors relative to the target at a future time

NCC (Rendezvous corrective combination) - First on-board targeted burn in the rendezvous sequence. Using star tracker data, it is performed to remove phasing and height errors relative to the target at Ti

Ti (Rendezvous terminal intercept) - Second on-board targeted burn in the rendezvous sequence. Using primarily rendezvous radar data, it places the Orbiter on a trajectory to intercept the target in one orbit

MC-1, MC-2, MC-3, MC-4 (Rendezvous midcourse burns) - These on-board targeted burns use star tracker and rendezvous radar data to correct the post-Ti trajectory in preparation for the final, manual proximity operations phase

Updated: 07/07/1999

Shuttle Reference and Data

Space Shuttle Solid Rocket Boosters

The two SRBs provide the main thrust to lift the space shuttle off the pad and up to an altitude of about 150,000 feet, or 24 nautical miles (28 statute miles). In addition, the two SRBs carry the entire weight of the external tank and orbiter and transmit the weight load through their structure to the mobile launcher platform.

Each booster has a thrust (sea level) of approximately 3,300,000 pounds at launch. They are ignited after the three space shuttle main engines'' thrust level is verified. The two SRBs provide 71.4 percent of the thrust at lift- off and during first-stage ascent. Seventy- five seconds after SRB separation, SRB apogee occurs at an altitude of approximately 220,000 feet, or 35 nautical miles (41 statute miles). SRB impact occurs in the ocean approximately 122 nautical miles (141 statute miles) downrange.

The SRBs are the largest solid- propellant motors ever flown and the first designed for reuse. Each is 149.16 feet long and 12.17 feet in diameter.

Each SRB weighs approximately 1,300,000 pounds at launch. The propellant for each solid rocket motor weighs approximately 1,100,000 pounds. The inert weight of each SRB is approximately 192,000 pounds.

Primary elements of each booster are the motor (including case, propellant, igniter and nozzle), structure, separation systems, operational flight instrumentation, recovery avionics, pyrotechnics, deceleration system, thrust vector control system and range safety destruct system.

Each booster is attached to the external tank at the SRB''s aft frame by two lateral sway braces and a diagonal attachment. The forward end of each SRB is attached to the external tank at the forward end of the SRB''s forward skirt. On the launch pad, each booster also is attached to the mobile launcher platform at the aft skirt by four bolts and nuts that are severed by small explosives at lift-off.

During the downtime following the Challenger accident, detailed structural analyses were performed on critical structural elements of the SRB. Analyses were primarily focused in areas where anomalies had been noted during postflight inspection of recovered hardware.

One of the areas was the attach ring where the SRBs are connected to the external tank. Areas of distress were noted in some of the fasteners where the ring attaches to the SRB motor case. This situation was attributed to the high loads encountered during water impact. To correct the situation and ensure higher strength margins during ascent, the attach ring was

redesigned to encircle the motor case completely (360 degrees). Previously, the attach ring formed a C and encircled the motor case 270 degrees.

Additionally, special structural tests were performed on the aft skirt. During this test program, an anomaly occurred in a critical weld between the hold-down post and skin of the skirt. A redesign was implemented to add reinforcement brackets and fittings in the aft ring of the skirt.

These two modifications added approximately 450 pounds to the weight of each SRB.

The propellant mixture in each SRB motor consists of an ammonium perchlorate (oxidizer, 69.6 percent by weight), aluminum (fuel, 16 percent), iron oxide (a catalyst, 0.4 percent), a polymer (a binder that holds the mixture together, 12.04 percent), and an epoxy curing agent (1.96 percent). The propellant is an 11-point star- shaped perforation in the forward motor segment and a double- truncated- cone perforation in each of the aft segments and aft closure. This configuration provides high thrust at ignition and then reduces the thrust by approximately a third 50 seconds after lift-off to prevent overstressing the vehicle during maximum dynamic pressure.

The SRBs are used as matched pairs and each is made up of four solid rocket motor segments. The pairs are matched by loading each of the four motor segments in pairs from the same batches of propellant ingredients to minimize any thrust imbalance. The segmented-casing design assures maximum flexibility in fabrication and ease of transportation and handling. Each segment is shipped to the launch site on a heavy- duty rail car with a specially built cover.

The nozzle expansion ratio of each booster beginning with the STS-8 mission is 7-to-79. The nozzle is gimbaled for thrust vector (direction) control. Each SRB has its own redundant auxiliary power units and hydraulic pumps. The all-axis gimbaling capability is 8 degrees. Each nozzle has a carbon cloth liner that erodes and chars during firing. The nozzle is a convergent- divergent, movable design in which an aft pivot- point flexible bearing is the gimbal mechanism.

The cone- shaped aft skirt reacts the aft loads between the SRB and the mobile launcher platform. The four aft separation motors are mounted on the skirt. The aft section contains avionics, a thrust vector control system that consists of two auxiliary power units and hydraulic pumps, hydraulic systems and a nozzle extension jettison system.

The forward section of each booster contains avionics, a sequencer, forward separation motors, a nose cone separation system, drogue and main parachutes, a recovery beacon, a recovery light, a parachute camera on selected flights and a range safety system.

Each SRB has two integrated electronic assemblies, one forward and one aft. After burnout, the forward assembly initiates the release of the nose cap

and frustum and turns on the recovery aids. The aft assembly, mounted in the external tank/SRB attach ring, connects with the forward assembly and the orbiter avionics systems for SRB ignition commands and nozzle thrust vector control. Each integrated electronic assembly has a multiplexer/ demultiplexer, which sends or receives more than one message, signal or unit of information on a single communication channel.

Eight booster separation motors (four in the nose frustum and four in the aft skirt) of each SRB thrust for 1.02 seconds at SRB separation from the external tank. Each solid rocket separation motor is 31.1 inches long and 12.8 inches in diameter.

Location aids are provided for each SRB, frustum/ drogue chutes and main parachutes. These include a transmitter, antenna, strobe/ converter, battery and salt water switch electronics. The location aids are designed for a minimum operating life of 72 hours and when refurbished are considered usable up to 20 times. The flashing light is an exception. It has an operating life of 280 hours. The battery is used only once.

The SRB nose caps and nozzle extensions are not recovered.

The recovery crew retrieves the SRBs, frustum/ drogue chutes, and main parachutes. The nozzles are plugged, the solid rocket motors are dewatered, and the SRBs are towed back to the launch site. Each booster is removed from the water, and its components are disassembled and washed with fresh and deionized water to limit salt water corrosion. The motor segments, igniter and nozzle are shipped back to Thiokol for refurbishment.

Each SRB incorporates a range safety system that includes a battery power source, receiver/ decoder, antennas and ordnance.

HOLD-DOWN POSTS

Each solid rocket booster has four hold- down posts that fit into corresponding support posts on the mobile launcher platform. Hold- down bolts hold the SRB and launcher platform posts together. Each bolt has a nut at each end, but only the top nut is frangible. The top nut contains two NASA standard detonators, which are ignited at solid rocket motor ignition commands.

When the two NSDs are ignited at each hold- down, the hold- down bolt travels downward because of the release of tension in the bolt (pretensioned before launch), NSD gas pressure and gravity. The bolt is stopped by the stud deceleration stand, which contains sand. The SRB bolt is 28 inches long and is 3.5 inches in diameter. The frangible nut is captured in a blast container.

The solid rocket motor ignition commands are issued by the orbiter''s computers through the master events controllers to the hold- down

pyrotechnic initiator controllers on the mobile launcher platform. They provide the ignition to the hold- down NSDs. The launch processing system monitors the SRB hold- down PICs for low voltage during the last 16 seconds before launch. PIC low voltage will initiate a launch hold.

SRB IGNITION

SRB ignition can occur only when a manual lock pin from each SRB safe and arm device has been removed. The ground crew removes the pin during prelaunch activities. At T minus five minutes, the SRB safe and arm device is rotated to the arm position. The solid rocket motor ignition commands are issued when the three SSMEs are at or above 90-percent rated thrust, no SSME fail and/or SRB ignition PIC low voltage is indicated and there are no holds from the LPS.

The solid rocket motor ignition commands are sent by the orbiter computers through the MECs to the safe and arm device NSDs in each SRB. A PIC single-channel capacitor discharge device controls the firing of each pyrotechnic device. Three signals must be present simultaneously for the PIC to generate the pyro firing output. These signals- arm, fire 1 and fire 2-originate in the orbiter general- purpose computers and are transmitted to the MECs. The MECs reformat them to 28-volt dc signals for the PICs. The arm signal charges the PIC capacitor to 40 volts dc (minimum of 20 volts dc).

The fire 2 commands cause the redundant NSDs to fire through a thin barrier seal down a flame tunnel. This ignites a pyro booster charge, which is retained in the safe and arm device behind a perforated plate. The booster charge ignites the propellant in the igniter initiator; and combustion products of this propellant ignite the solid rocket motor initiator, which fires down the length of the solid rocket motor igniting the solid rocket motor propellant.

The GPC launch sequence also controls certain critical main propulsion system valves and monitors the engine- ready indications from the SSMEs. The MPS start commands are issued by the onboard computers at T minus 6.6 seconds (staggered start- engine three, engine two, engine one- all approximately within 0.25 of a second), and the sequence monitors the thrust buildup of each engine. All three SSMEs must reach the required 90-percent thrust within three seconds; otherwise, an orderly shutdown is commanded and safing functions are initiated.

Normal thrust buildup to the required 90-percent thrust level will result in the SSMEs being commanded to the lift- off position at T minus three seconds as well as the fire 1 command being issued to arm the SRBs. At T minus three seconds, the vehicle base bending load modes are allowed to initialize (movement of approximately 25.5 inches measured at the tip of the external tank, with movement towards the external tank).

At T minus zero, the two SRBs are ignited, under command of the four

onboard computers; separation of the four explosive bolts on each SRB is initiated (each bolt is 28 inches long and 3.5 inches in diameter); the two T-0 umbilicals (one on each side of the spacecraft) are retracted; the onboard master timing unit, event timer and mission event timers are started; the three SSMEs are at 100 percent; and the ground launch sequence is terminated.

The solid rocket motor thrust profile is tailored to reduce thrust during the maximum dynamic pressure region.

ELECTRICAL POWER DISTRIBUTION

Electrical power distribution in each SRB consists of orbiter- supplied main dc bus power to each SRB via SRB buses A, B and C. Orbiter main dc buses A, B and C supply main dc bus power to corre sponding SRB buses A, B and C. In addition, orbiter main dc bus C supplies backup power to SRB buses A and B, and orbiter bus B supplies backup power to SRB bus C. This electrical power distribution arrangement allows all SRB buses to remain powered in the event one orbiter main bus fails.

The nominal dc voltage is 28 volts dc, with an upper limit of 32 volts dc and a lower limit of 24 volts dc.

HYDRAULIC POWER UNITS

There are two self- contained, independent HPUs on each SRB. Each HPU consists of an auxiliary power unit, fuel supply module, hydraulic pump, hydraulic reservoir and hydraulic fluid manifold assembly. The APUs are fueled by hydrazine and generate mechanical shaft power to a hydraulic pump that produces hydraulic pressure for the SRB hydraulic system. The two separate HPUs and two hydraulic systems are located on the aft end of each SRB between the SRB nozzle and aft skirt. The HPU components are mounted on the aft skirt between the rock and tilt actuators. The two systems operate from T minus 28 seconds until SRB separation from the orbiter and external tank. The two independent hydraulic systems are connected to the rock and tilt servoactuators.

The APU controller electronics are located in the SRB aft integrated electronic assemblies on the aft external tank attach rings.

The APUs and their fuel systems are isolated from each other. Each fuel supply module (tank) contains 22 pounds of hydrazine. The fuel tank is pressurized with gaseous nitrogen at 400 psi, which provides the force to expel (positive expulsion) the fuel from the tank to the fuel distribution line, maintaining a positive fuel supply to the APU throughout its operation.

The fuel isolation valve is opened at APU startup to allow fuel to flow to the APU fuel pump and control valves and then to the gas generator. The gas generator''s catalytic action decomposes the fuel and creates a hot gas. It

feeds the hot gas exhaust product to the APU two- stage gas turbine. Fuel flows primarily through the startup bypass line until the APU speed is such that the fuel pump outlet pressure is greater than the bypass line''s. Then all the fuel is supplied to the fuel pump.

The APU turbine assembly provides mechanical power to the APU gearbox. The gearbox drives the APU fuel pump, hydraulic pump and lube oil pump. The APU lube oil pump lubricates the gearbox. The turbine exhaust of each APU flows over the exterior of the gas generator, cooling it, and is then directed overboard through an exhaust duct.

When the APU speed reaches 100 percent, the APU primary control valve closes, and the APU speed is controlled by the APU controller electronics. If the primary control valve logic fails to the open state, the secondary control valve assumes control of the APU at 112-percent speed.

Each HPU on an SRB is connected to both servoactuators on that SRB. One HPU serves as the primary hydraulic source for the servoactuator, and the other HPU serves as the secondary hydraulics for the servoactuator. Each sevoactuator has a switching valve that allows the secondary hydraulics to power the actuator if the primary hydraulic pressure drops below 2,050 psi. A switch contact on the switching valve will close when the valve is in the secondary position. When the valve is closed, a signal is sent to the APU controller that inhibits the 100-percent APU speed control logic and enables the 112-percent APU speed control logic. The 100-percent APU speed enables one APU/HPU to supply sufficient operating hydraulic pressure to both servoactuators of that SRB.

The APU 100-percent speed corresponds to 72,000 rpm, 110-percent to 79,200 rpm, and 112-percent to 80,640 rpm.

The hydraulic pump speed is 3,600 rpm and supplies hydraulic pressure of 3,050, plus or minus 50, psi. A high- pressure relief valve provides overpressure protection to the hydraulic system and relieves at 3,750 psi.

The APUs/HPUs and hydraulic systems are reusable for 20 missions.

THRUST VECTOR CONTROL

Each SRB has two hydraulic gimbal servoactuators: one for rock and one for tilt. The servoactuators provide the force and control to gimbal the nozzle for thrust vector control.

The space shuttle ascent thrust vector control portion of the flight control system directs the thrust of the three shuttle main engines and the two SRB nozzles to control shuttle attitude and trajectory during lift- off and ascent. Commands from the guidance system are transmitted to the ATVC drivers, which transmit signals proportional to the commands to each servoactuator of the main engines and SRBs. Four independent flight control system channels and four ATVC channels control six main engine and four SRB

ATVC drivers, with each driver controlling one hydraulic port on each main and SRB servoactuator.

Each SRB servoactuator consists of four independent, two- stage servovalves that receive signals from the drivers. Each servovalve controls one power spool in each actuator, which positions an actuator ram and the nozzle to control the direction of thrust.

The four servovalves in each actuator provide a force- summed majority voting arrangement to position the power spool. With four identical commands to the four servovalves, the actuator force-sum action prevents a single erroneous command from affecting power ram motion. If the erroneous command persists for more than a predetermined time, differential pressure sensing activates a selector valve to isolate and remove the defective servovalve hydraulic pressure, permitting the remaining channels and servovalves to control the actuator ram spool.

Failure monitors are provided for each channel to indicate which channel has been bypassed. An isolation valve on each channel provides the capability of resetting a failed or bypassed channel.

Each actuator ram is equipped with transducers for position feedback to the thrust vector control system. Within each servoactuator ram is a splashdown load relief assembly to cushion the nozzle at water splashdown and prevent damage to the nozzle flexible bearing.

SRB RATE GYRO ASSEMBLIES

Each SRB contains two RGAs, with each RGA containing one pitch and one yaw gyro. These provide an output proportional to angular rates about the pitch and yaw axes to the orbiter computers and guidance, navigation and control system during first- stage ascent flight in conjunction with the orbiter roll rate gyros until SRB separation. At SRB separation, a switchover is made from the SRB RGAs to the orbiter RGAs.

The SRB RGA rates pass through the orbiter flight aft multiplexers/ demultiplexers to the orbiter GPCs. The RGA rates are then mid-value-selected in redundancy management to provide SRB pitch and yaw rates to the user software. The RGAs are designed for 20 missions.

SRB SEPARATION

SRB separation is initiated when the three solid rocket motor chamber pressure transducers are processed in the redundancy management middle value select and the head- end chamber pressure of both SRBs is less than or equal to 50 psi. A backup cue is the time elapsed from booster ignition.

The separation sequence is initiated, commanding the thrust vector control actuators to the null position and putting the main propulsion system into a

second-stage configuration (0.8 second from sequence initialization), which ensures the thrust of each SRB is less than 100,000 pounds. Orbiter yaw attitude is held for four seconds, and SRB thrust drops to less than 60,000 pounds.

The SRBs separate from the external tank within 30 milliseconds of the ordnance firing command.

The forward attachment point consists of a ball (SRB) and socket (ET) held together by one bolt. The bolt contains one NSD pressure cartridge at each end. The forward attachment point also carries the range safety system cross-strap wiring connecting each SRB RSS and the ET RSS with each other.

The aft attachment points consist of three separate struts: upper, diagonal and lower. Each strut contains one bolt with an NSD pressure cartridge at each end. The upper strut also carries the umbilical interface between its SRB and the external tank and on to the orbiter.

There are four booster separation motors on each end of each SRB. The BSMs separate the SRBs from the external tank. The solid rocket motors in each cluster of four are ignited by firing redundant NSD pressure cartridges into redundant confined detonating fuse manifolds.

The separation commands issued from the orbiter by the SRB separation sequence initiate the redundant NSD pressure cartridge in each bolt and ignite the BSMs to effect a clean separation.

Updated: 07/07/1999

Shuttle Reference and Data

Space Shuttle Super Light Weight Tank (SLWT)

The super lightweight external tank (SLWT)made its first Shuttle flight June 2, on mission STS-91. The SLWT is 7,500 pounds lighter than the standard external tank. The lighter weight tank will allow the shuttle to deliver International Space Station elements (such as the service module) into the proper orbit.

The SLWT is the same size as the previous design. But the liquid hydrogen tank and the liquid oxygen tank are made of aluminum lithium, a lighter, stronger material than the metal alloy used for the Shuttle's current tank. The tank's structural design has also been improved, making it 30% stronger and 5% less dense.

The SLWT, like the standard tank, is manufactured at Michoud Assembly, near New Orleans, Louisiana, by Lockheed Martin.

The 154-foot-long external tank is the largest single component of the space shuttle. It stands taller than a 15-story building and has a diameter of about 27 feet. The external tank holds over 530,000 gallons of liquid hydrogen and liquid oxygen in two separate tanks. The hydrogen (fuel) and liquid oxygen (oxidizer) are used as propellants for the Shuttle's three main engines.

Updated: 07/07/1999