NASA News

National Aeronautics and
Space Administration

Washington, D.C. 20546
AC 202 755-8370

For Release Immediately

Press Kit

Project NOAA -G

Contents

General Release.....1

NOAA-G Spacecraft.....2

Advanced TIROS-N Spacecraft.....2a

NOAA-G Orbit.....2b

Data Collection, Launch Vehicle, Launch
Sequence.....3

Atlas E Launch Vehicle.....3a

Launch-to-Orbit Sequence.....3b

Program History.....4

Contractors/Contributors.....5

NASA News

National Aeronautics and
Space Administration

Washington, D.C. 20546
AC 202-453-8400

Jim Kukowski
Headquarters, Washington, D.C.
(Phone: 202/453-1548)

Bud Littin
NOAA Headquarters, Washington, D.C.
(Phone: 202/377-8090)

Jim Elliott
Goddard Space Flight Center, Greenbelt, Md.
(Phone: 301/286-6256)

For Release:
August 19, 1986

RELEASE NO: 86-115

NASA TO LAUNCH NOAA-G WEATHER SATELLITE

A meteorological weather satellite, NOAA-G, is scheduled to be launched from Vandenberg Air Force Base, Calif., aboard a U.S. Air Force Atlas-E launch vehicle, no earlier than 11:47 a.m., EDT, August 30. The spacecraft project is managed by NASA for the National Oceanic and Atmospheric Administration (NOAA).

The satellite, a third-generation operational weather satellite, will be placed into a near-polar orbit at an altitude of 518 miles. The spacecraft, NOAA-10 in orbit, will circle the globe 14 times each day observing a different position of the Earth's surface on each revolution as the Earth turns beneath the spacecraft's orbit. It will become the "morning" satellite, joining NOAA-9, in NOAA's two polar orbit satellite system.

The satellite's orbital period will be approximately 101 minutes. The orbit is planned to be Sun synchronous so that the spacecraft will cross the equator at approximately 7:30 a.m. (southbound) and 7:30 p.m. (northbound), local solar time.

Like other NOAA satellites, NOAA-G will collect meteorological data and transmit the information directly to users around the world to enhance local weather analysis and forecasting.

In addition to assisting in local weather forecasting, the satellite data are used for hurricane tracking and warning, and for agricultural, commercial fishing, forestry, maritime and other industrial uses.

- more -

A search and rescue system is aboard the spacecraft to provide additional worldwide monitoring of search and rescue beacons placed on numerous aircraft and ships at sea.

NOAA-G SPACECRAFT

The NOAA-G spacecraft is a three-axis, stabilized advanced TIROS-N weather satellite. It carries a variety of instruments to provide day and night global and environmental and associated data for operational purpose on a daily basis.

Physical charateristics are:

Main body: 13.7 ft. long, 6.2 ft. in diameter
Solar Array: 7.8 by 16.1 ft. (125 square ft.)
Weight: at liftoff, 3775 pounds; on orbit, 2288 lbs.
Lifetime: greater than 2 years

The spacecraft carries its own apogee kick motor to boost the spacecraft to its desired orbital altitude after separation from the Atlas launch vehicle. (See spacecraft artwork.)

Among its instruments, NOAA-G carries a data collection system (DCS), the ARGOS/DCS provided by France, which assists NOAA in its overall environmental mission and in support of the Global Atmospheric Research Program. The system collects data from approximately 2000 platforms (buoys, free-floating balloons and remote weather stations) located around the world which measure temperature, atmospheric pressure and altitude and relays the data to a central processing facility.

The space environment monitor (SEM) is a multi-channel charged particle spectrometer which acts as a solar warning system. It measures the density of the Earth's radiation belts and the particle precipitation resulting from solar radiation.

The TIROS operational vertical sounder system (TOVS) consists of instruments which measure radiant energy from the atmosphere. The data are used to determine the atmosphere's temperature from the Earth's surface to the upper stratosphere. The instruments are the high resolution infrared radiation sounder (HIRS/2) and the microwave sounding unit (MSU).

Special instrumentation aboard NOAA-G will provide a search and rescue capability through the SARSAT system. A transmitter aboard a downed aircraft or on board a distressed ship at sea can transmit its location to the satellite. The position information is then relayed to ground-sea-air rescue and recovery forces. The search and rescue instruments are provided by Canada and France.

Advanced TIROS-N Spacecraft

LEGEND	
AVHRR	ADVANCED VERY HIGH RESOLUTION RADIOMETER
BDA	BEACON/COMMAND ANTENNA
ERBE-NS	EARTH RADIATION BUDGET EXPERIMENT- -NONSCANNER
ERBE-S	EARTH RADIATION BUDGET EXPERIMENT- -SCANNER
ESA	EARTH SENSOR ASSEMBLY
HIRS	HIGH-RESOLUTION INFRARED SOUNDER
IMP	INSTRUMENT MOUNTING PLATFORM
IMU	INERTIAL MEASUREMENT UNIT
MSU	MICROWAVE SOUNDING UNIT
REA	REACTION ENGINE ASSEMBLY
SAD	SOLAR-ARRAY DRIVE
SBA	S-BAND ANTENNA
SBUV	SOLAR BACKSCATTER ULTRAVIOLET SOUNDING SPECTRAL RADIOMETER
SLA	SEARCH-AND-RESCUE TRANSMITTING ANTENNA (L-BAND)
SOA	S-BAND OMNI ANTENNA
SRA	SEARCH-AND-RESCUE RECEIVING ANTENNA
SSU	STRATOSPHERIC SOUNDING UNIT
UDA	ULTRA-HIGH-FREQUENCY DATA COLLECTION SYSTEM ANTENNA
VRA	VERY-HIGH-FREQUENCY REALTIME ANTENNA

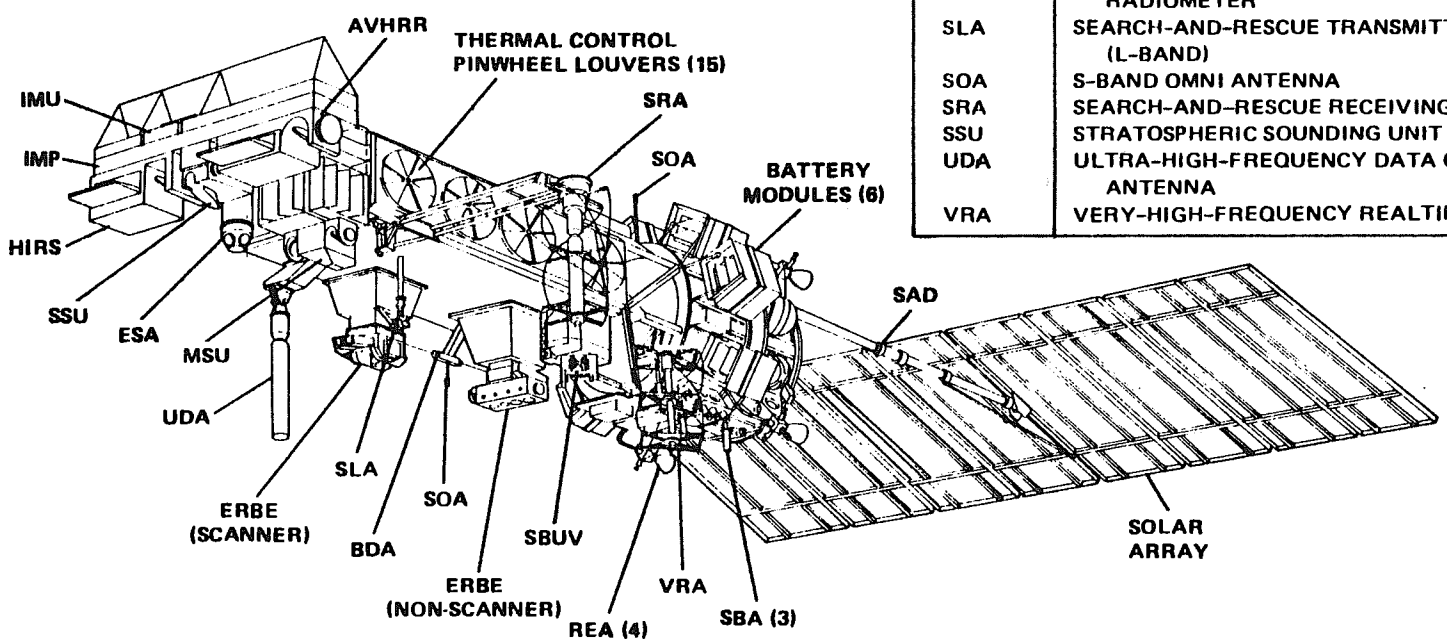

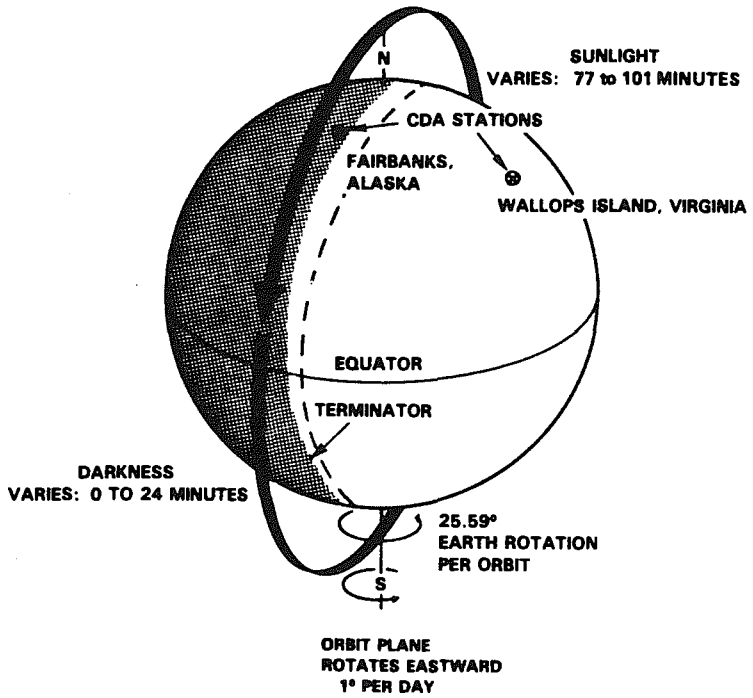

ORBITAL CHARACTERISTICS
Apogee — 833 - km (450 nmi)
Perigee — 833 - km (450 nmi)
Minutes per orbit — 101.35
Degrees inclination — 98.7

NOAA-G Orbit

The COSPAS/SARSAT program is a joint international endeavor between the U.S., Canada, France and the Soviet Union. More than 600 lives have been saved by the COSPAS/SARSAT system since its inception in 1982.

NOAA-G also carries a NASA earth radiation budget experiment instrument designed to measure components of radiation energy from the Earth on regional, zonal and global scales from orbital altitudes several times per day.

DATA COLLECTION

All data are collected by ground facilities which continually track the satellite in orbit. Major operational ground facilities include NOAA's National Environmental Satellite Data and Information Services (NESDIS) Command and Data Acquisition stations at Fairbanks, Alaska, and Wallops Island, Va. The NESDIS Satellite Operations Control Center (SOCC), a Data Processing Services Subsystem (DPSS) and Data Acquisition and Control Subsystem are located at Suitland, Md. The French receiving station is at Lannion, France.

LAUNCH VEHICLE

The expendable launch vehicle is provided by the U.S. Air Force. It is an Atlas-E series ballistic missile, refurbished and modified to be used as a launch vehicle for Earth orbital missions. The Atlas-E is capable of launching spacecraft in a variety of low Earth orbits. The vehicle stands 94 ft. tall and is 10 ft. in diameter. The fairing (protective cover around the NOAA-G) is 24.3 ft. long and 7 ft. in diameter. The Atlas-E is powered by two booster engines, a sustainer engine and two vernier engines. At liftoff the vehicle carries 18,294 gallons of liquid oxygen and 11,384 gallons of RP-1, a highly refined kerosene. (See Atlas artwork.)

LAUNCH SEQUENCE

Launch of the Atlas-E/NOAA-G is from Space Launch Complex-3 West at Vandenberg Air Force Base, near Lompoc, Calif. Launch services are provided by the U.S. Air Force.

At liftoff the Atlas-E's booster and sustainer engines are ignited. AT 121.5 seconds into the launch phase, booster engine cutoff occurs. The sustainer engine continues as the booster engine package is jettisoned at 124.6 secs. The sustainer engine continues to thrust until 320.9 secs. Vernier engine cutoff occurs at 340 secs. Six seconds later, at 346 secs., the spacecraft separates from the launch vehicle.

ATLAS E

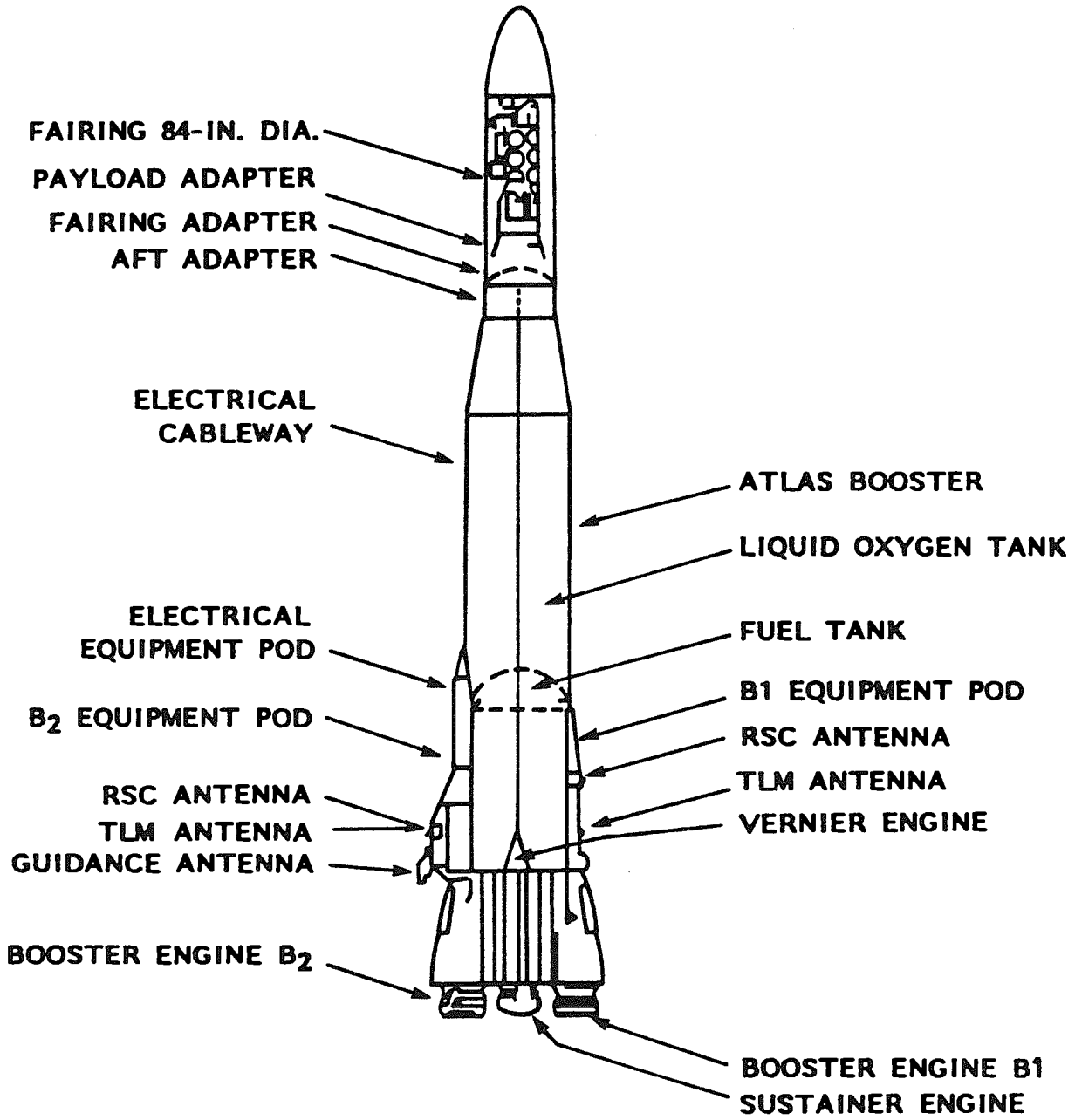
FAIRING 84-IN. DIA.
PAYLOAD ADAPTER
FAIRING ADAPTER
AFT ADAPTER
ELECTRICAL CABLEWAY
ATLAS BOOSTER
LIQUID OXYGEN TANK
ELECTRICAL EQUIPMENT POD
FUEL TANK
B1 EQUIPMENT POD
B2 EQUIPMENT POD
RSC ANTENNA
TLM ANTENNA
RSC ANTENNA
TLM ANTENNA
VERNIER ENGINE
GUIDANCE ANTENNA
BOOSTER ENGINE B2
BOOSTER ENGINE B1
SUSTAINER ENGINE

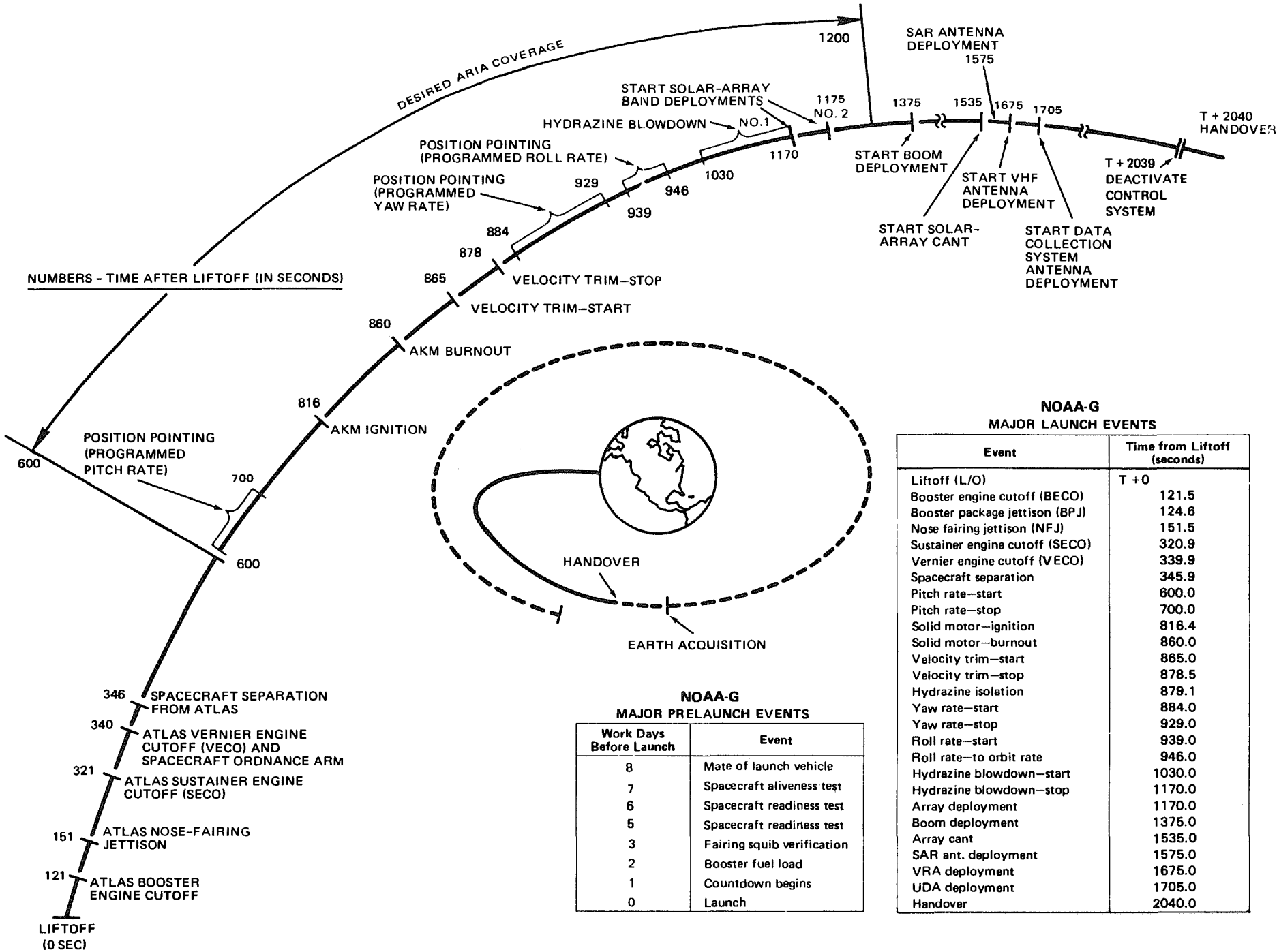

NOAA-G
MAJOR PRELAUNCH EVENTS

Work Days Before Launch	Event
8	Mate of launch vehicle
7	Spacecraft aliveness test
6	Spacecraft readiness test
5	Spacecraft readiness test
3	Fairing squib verification
2	Booster fuel load
1	Countdown begins
0	Launch

NOAA-G
MAJOR LAUNCH EVENTS

Event	Time from Liftoff (seconds)
Liftoff (L/O)	T +0
Booster engine cutoff (BECO)	121.5
Booster package jettison (BPJ)	124.6
Nose fairing jettison (NFJ)	151.5
Sustainer engine cutoff (SECO)	320.9
Vernier engine cutoff (VECO)	339.9
Spacecraft separation	345.9
Pitch rate–start	600.0
Pitch rate–stop	700.0
Solid motor–ignition	816.4
Solid motor–burnout	860.0
Velocity trim–start	865.0
Velocity trim–stop	878.5
Hydrazine isolation	879.1
Yaw rate–start	884.0
Yaw rate–stop	929.0
Roll rate–start	939.0
Roll rate–to orbit rate	946.0
Hydrazine blowdown–start	1030.0
Hydrazine blowdown–stop	1170.0
Array deployment	1170.0
Boom deployment	1375.0
Array cant	1535.0
SAR ant. deployment	1575.0
VRA deployment	1675.0
UDA deployment	1705.0
Handover	2040.0

Launch-to-Orbit Injection Sequence

Following a coast time of 7 minutes and 50 secs., an apogee kick motor aboard the NOAA-G is fired for 44 seconds to place the spacecraft into the desired 450 mile high orbit. Trim burns, if necessary, will "fine tune" the orbital velocity.

After velocity trim, a series of commands are sent to the spacecraft to place it in the proper operational altitude and begin deployment of the solar array and experiment boom. (See the Launch-to-Orbit Injection Sequence chart.)

PROGRAM HISTORY

The polar, low Earth-orbiting satellite series is a joint effort by NASA and NOAA to provide systematic global weather observations. A NASA-Department of Commerce agreement signed in July 1973 gives NOAA the responsibility for establishing the observational requirements and for operating the system. NASA is responsible for procuring and developing the spacecraft and for conducting an on-orbit checkout of the spacecraft.

The first generation of operational weather satellites evolved from NASA's TIROS series with the launch of TIROS-1 on April 1, 1960. Ten TIROS satellites were launched through July 1965.

The first generation of operational spacecraft (ESSA-1 through ESSA-10) consisted of four advanced vidicon camera system versions that provided storage and playback of global cloud cover images and five automatic picture transmission versions that provided realtime local area coverage.

The second generation of operational spacecraft, the TIROS-M series, combined the remote and local viewing functions into a single spacecraft and also had a nighttime viewing capability along with a limited atmospheric temperature sounding capability. There were five spacecraft in this series, NOAA-1 through NOAA-5.

The NASA-funded TIROS-N, launched in 1978, was the prototype for the third generation of low Earth orbiting weather satellites to satisfy the increasing needs of the operational system. NOAA-G is the sixth NOAA-funded spacecraft of the TIROS-N series to be launched.

NOAA-G will replace NOAA-6 in orbit as the "morning" spacecraft. NOAA-6 was reactivated when NOAA-8 failed in June 1984. NOAA-H is scheduled to replace NOAA-9 as the "afternoon" satellite.

CONTRACTORS

Atlas launch vehicle	General Dynamics, Convair Division
NOAA-G spacecraft	RCA Astro-Electronics Div.
Advanced Very High Resolution Radiometer	ITT
TIROS Operational Vertical Sounder System	
High Resolution Infrared Radiation Sounder	ITT
Microwave Sounding Unit	JPL
Space Environment Monitor	Ford Aeronautics Communications
Earth Radiation Budget Experiment	TRW

FOREIGN CONTRIBUTORS

ARGOS Data Collection System	CNES/France
Search and Rescue Instruments	CRC/Canada CNES/France

- end -

This release and other NASA information is available electronically through ITT Dialcom. For access to NASA NEWS, through this system, contact Jim Hawley, ITT Dialcom, Inc. at 202/488-0550.