NATIONAL AERONAUTICS AND
SPACE ADMINISTRATION
Washington, D. C. 20546
202-755-8370

FOR RELEASE:

Sunday, October 21, 1973

PROJECT: IMP-J

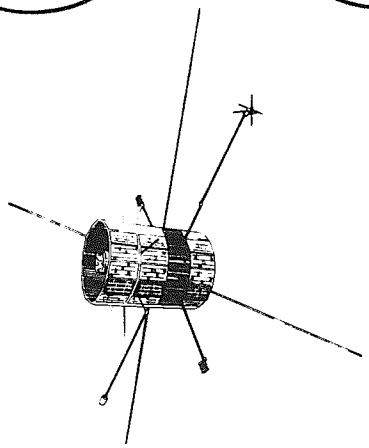

PRESS KIT

contents

GENERAL RELEASE ---------- 1-7
THE MAGNETOSPHERE ---------- 8-9
THE SCIENTIFIC EXPERIMENTS ---------- 9-12
THE IMP-J SPACECRAFT ---------- 13
ENGINEERING TESTS ---------- 14
TELECOMMUNICATIONS ---------- 14
TRACKING AND DATA OPERATIONS ---------- 15
LAUNCH OPERATIONS ---------- 16
DELTA LAUNCH VEHICLE ---------- 16-17
SEQUENCE OF FLIGHT EVENTS ---------- 18
IMP-J MISSION FACTS ---------- 19-20
IMP SERIES STATUS ---------- 21
IMP SPACECRAFT EVOLUTION ---------- 22
IMP SERIES RESULTS ---------- 23-30
EXPERIMENT AND PRINCIPAL INVESTIGATORS ------ 31
PROGRAM OFFICIALS AND CONTRACTORS ---------- 32-33

NATIONAL AERONAUTICS AND
SPACE ADMINISTRATION
Washington, D. C. 20546

FOR RELEASE:

Sunday, October 21, 1973

Nicholas Panagakos
Headquarters, Washington, D.C.
(Phone: 202/755-3680)

Joseph McRoberts
Goddard Space Flight Center, Greenbelt, Md.
(Phone: 301/982-5566)

RELEASE NO: 73-211

IMP-J TO BE LAUNCHED

The tenth and last in a series of Interplanetary Monitoring Platforms (IMP) designed to investigate the Earth's radiation environment over an entire solar cycle will be launched from Kennedy Space Center, Fla., no earlier than Oct. 25 aboard a Delta rocket.

The flight of IMP-J will mark the end of an 11-year cycle of solar activity and a return to the Quiet Sun period with which NASA began its IMP exploration in 1963.

Completion of the IMP series will provide science with the most continuous record ever obtained of the characteristics of the interplanetary medium.

- more -

October 11, 1973

To be named Explorer 50 after achieving orbit, IMP-J carries 12 scientific instruments to obtain measurements of energetic particles, plasmas, and magnetic and electrical fields.

The 398-kg. (877-lb.) satellite will join its sister spacecraft, Explorer 47 (IMP-H), in an almost identical near-circular orbit --- about 192,620 by 234,700 km. (119,770 by 145,950 miles) above the Earth --- halfway to the Moon.

The two spacecraft will frequently be 180 degrees apart, providing investigators with a means of correlating data on various phenomena and disturbances.

For example, it would often happen that the pair would view the impact of a solar flare with one spacecraft on the dark side of the Earth and the other on the light side. This will allow scientists to make highly accurate measurements of the same flare on opposite sides of the Earth at the same time, to see its effect on the environment at the two different points.

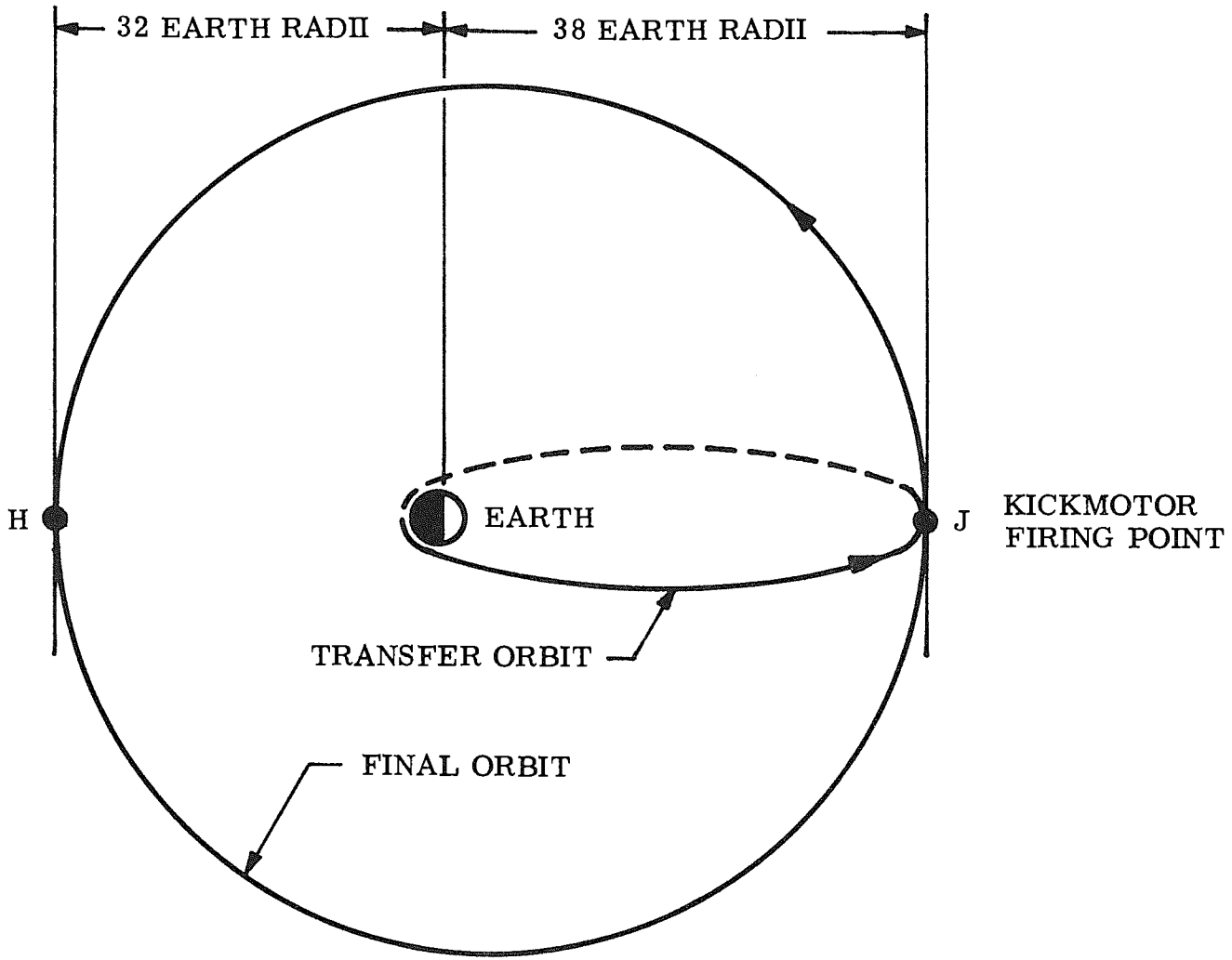
32 EARTH RADII
38 EARTH RADII
H
EARTH
J
KICKMOTOR
FIRING POINT
TRANSFER ORBIT
FINAL ORBIT

The two spacecraft will also form reference points for other spacecraft taking measurements in deep space, such as the Jupiter-bound Pioneer craft and the soon-to-be-launched Mariner to Venus and Mercury. Comparison of their measurements with IMP data will enable the investigators to separate effects of the Sun from those of the galaxy.

The drum-shaped IMP-J will measure changes in Earth's magnetic tail as the changing solar-wind "weather" disturbs the Earth's environment. In addition, this newest satellite will continue to provide warning of possible solar flare radiation for manned space flight missions as its predecessors have done over the years.

The importance of the magnetosphere and its influence on the Earth's environment has been described by a National Research Council panel on Solar-Terrestrial Research as follows:

"The magnetosphere exerts a subtle but significant influence in several domains that directly affect man and his interaction with his environment. The magnetosphere determines how a portion of the vast energies of the Sun's magnetic field and charged-particle populations are transmitted to the Earth's upper atmosphere. Some of this energy ultimately reaches the Earth's surface. This energy may be sufficient to perturb the delicate dynamic balance of the atmosphere in general and thus contribute to the release of large amounts of energy accumulated in the lower atmosphere. Any increase in our understanding of the associated processes can be beneficial to the understanding of our immediate environment and allow us to better evaluate the relative importance of the factors that control this environment."

Commenting on the IMP series accomplishments, Dr. Norman F. Ness, IMP-J Project Scientist, of NASA's Goddard Space Flight Center, Greenbelt, MD., said:

"We have explored and defined the average characteristics and behavior of the Earth's magnetosphere and how the Sun affects it. As a result, we have a much better understanding of the relationship of such events as solar flares to global magnetic storms which cause terrestrial effects such as auroras and communications blackouts of world radio and undersea cable networks."

A measure of the progress made in the IMP spacecraft during the past ten years can be seen in a comparison of satellite and experiment weights and power supplies. The first IMP weighed 62 kilograms (138 pounds) including an experiment package of 19 kilograms (43 pounds), and had a power supply of 35 watts for the total spacecraft,with 10 watts for the experiments. This compares with IMP-J's 395 kilograms (877 pounds), 81 kilograms (181 pounds) for experiments and power supply of 120 and 42 watts for total spacecraft and experiments respectively.

A follow-on cooperative mission, called the International Magnetosphere Explorer (IME) Project, is planned with the European Space Research Organization (ESRO). This will involve the launch of two Earth-orbiting spacecraft and a heliocentric (solar orbit) spacecraft in the late 1970s. The Earth-orbiting spacecraft will make repeated passes through the boundaries of Earth's magnetic field to measure fine-scale and time variations, while the interplanetary heliocentric spacecraft records simultaneous variations of the incoming solar wind.

IMP-J experiments are provided by universities throughout the nation, the National Oceanic and Atmospheric Administration (NOAA), the Atomic Energy Commission (AEC), and GSFC. Two engineering tests also will be conducted.

The series of IMP spacecraft is part of the space exploration program directed by NASA's Office of Space Science. GSFC, where the IMP spacecraft are constructed, is responsible for spacecraft and launch vehicle project management. EMR-Aerospace Sciences, College Park, Md., built the spacecraft and electrical harness, integrational spacecraft subsystems and assisted in environmental testing and launch support. McDonnell Douglas Astronautics Company, Huntington Beach, California, is prime contractor for the Delta launch vehicle.

The IMP-J spacecraft, including experiments, cost approximately $8 million; the Delta rocket and launch services, approximately $7 million.

The launch window opens at 10:11 p.m. EDT and extends to 10:32 p.m. EDT on October 25 and 26.

(END OF GENERAL RELEASE: BACKGROUND INFORMATION FOLLOWS.)

THE MAGNETOSPHERE

Earth is surrounded by an enormous teardrop-shaped envelope called the magnetosphere. The magnetosphere is formed by the solar wind -- a supersonic stream of particles -- "blowing," or impinging, on Earth's magnetic field. Within this region, complex electric and magnetic forces intereact with one another and with all charged particles that enter the region. Charged particles move from one hemisphere to another in seconds. Electrons speed into the upper atmosphere of the Earth at thousands of miles per second to interact with atmosphere molecules and atoms giving off tremendous energies that form the auroras and magnetic storms and often disrupt radio communications.

The only way to investigate the magnetosphere is by spacecraft. It cannot be reproduced and studied in the laboratory.

Energetic Particles

Cosmic rays come from deep space (galactic cosmic rays) and from the Sun (solar cosmic rays). They are high energy particles consisting primarily of protons (high energy hydrogen nuclei), alpha particles (helium nuclei), and heavier nuclei.

Cosmic rays are very powerful, some carrying energies ranging from a million to a billion - billion electron volts, capable of penetrating a one-meter (three-foot) lead wall.

The intensity of cosmic radiation also varies with the latitude on Earth, being more intense at the poles.

Solar cosmic rays have less energy than galactic cosmic rays. They stream from the Sun during periods of high solar activity and produce clouds of highly charged particles, which are responsible for auroral displays, communications blackouts, magnetic storms, and other phenomena.

The Solar Plasma

The solar plasma or solar wind is the constant stream of charged particles, traveling at supersonic speeds, that are emitted from the Sun. It is made up primarily of electrons and protons which impinge upon Earth's magnetosphere in about equal numbers.

The stream of the solar plasma striking the magnetosphere tends to compress the magnetic field on the side toward the Sun and distends the tail, or the side away from the Sun, to a distance of millions of miles. The shape of the tail appears comet-like.

During periods of maximum solar activity, the stream of solar plasma increases greatly.

Fields

Magnetic fields permeate the universe. In our solar system the Sun's magnetic field affects the movement of particles in space. Solar disturbances can dramatically alter these fields.

THE SCIENTIFIC EXPERIMENTS

Energetic Particles

Cosmic Ray. Provided by the Goddard Space Flight Center, this experiment is part of a systematic program to study solar and galactic electrons and nuclei throughout the solar cycle. Solar modulation, quiet-time and flare-associated anisotropies, solar and magnetospheric acceleration processes, and solar composition are among the subjects to be studied.

The experiment consists of four separate telescopes including scintillators, surface barrier, and lithium drifted silicon detectors. A unique priority system is employed to overcome the limitations of relatively low bit-rate during intense solar flares. Principal investigator is Dr. F.B. McDonald.

Cosmic Ray. Provided by the University of Chicago, this experiment is designed to study the solar flare particle acceleration and particle containment in the vicinity of the Sun. The instrument will measure energy spectra, nuclear composition and electrons over a wide range of energies and a wide dynamic range of fluxes. Principal Investigator is Dr. J.A. Simpson.

Ion and Electron. Provided by the University of Maryland, the objective is to determine the composition and energy spectra of low energy particles observed during solar flares and "27 day" events. Special emphasis is placed on charge measurements and in particular those of positively charged particles in an energy band which has not been previously measured. The instrumentation can determine sign and magnitude of charge, measure the energy of cosmic ray particles and uniquely identify positrons, electrons, protons, helium nuclei, and carbon nitrogen and oxygen nuclei. Principal investigator is Dr. George Gloeckler.

Electrons and Isotopes. Provided by the California Institute of Technology, this experiment is to study local acceleration of particles, solar particle acceleration processes, and storage in the interplanetary medium and to study the interstellar propagation and solar modulation of particles in the interplanetary medium. This will be accomplished by measuring the differential energy spectra of electrons and hydrogen and helium isotopes.

The instrumentation consists of a multi-element, totally depleted solid state telescope with anticoincidence shielding. The detector is specially designed to eliminate scattered electron effects. Principal investigator is Dr. E.C. Stone.

Energetic Particles. Provided by the National Oceanic and Atmospheric Administration, this experiment is to study the propagation characteristics of solar cosmic rays through the interplanetary medium over the energy ranges indicated, to study electron and proton patches throughout the geomagnetic tail and near and through the flanks of the magnetopause, and to study the entry of solar cosmic rays into the geomagnetic field by utilizing comparisons with similar data from the TIROS series of satellites. The instrumentation consists of a three-element telescope configuration employing solid state detectors and a magnetic field to deflect electrons. Two side-mounted detectors are used to detect the electrons deflected by the magnet. Principal investigator is Dr. D.J. Williams.

Charged Particles. Provided by the Johns Hopkins University (Applied Physics Laboratory), the main objective of the charged particle measurements experiment is to measure protons, alpha particles, heavier nuclei, and X-rays in a wide energy interval, primarily designed to study radiations of solar origin, but with sufficient dynamic range and resolution to measure cosmic ray and magnetospheric tail particles. The experimental data will be used to study angular distributions, energy spectra, propagation characteristics, and absolute intensities of particles emitted from the Sun, as well as those streaming along the magnetospheric tail away from Earth. Solar x-ray emissions will be studied at two wavelengths and a large Geiger-Muller tube will be used to obtain information on galactic X-ray sources. Principal investigator is Dr. S.N. Krimigis.

Plasma

Plasma. Provided by the Massachusetts Institute of Technology, this experiment is developed to measure the properties of the plasma in the interplanetary region, in the transition region, and in the tail of the magnetosphere. The parameters measured are the energy distribution and the angular distribution of the charged particle flux for electrons in the equatorial plane of the spacecraft. The flow direction relative to the spacecraft equatorial plane is also determined.

A split collector "Faraday cup" (split about the equatorial plane of the spacecraft) with a modulation potential applied to one of the grids is the basic instrumentation. Principal investigator is Dr. H.S. Bridge.

Low Energy Particles. Provided by the University of Iowa, this experiment is designed to study the differential energy spectra of low energy electrons and protons measured over the geocentric radial distance of 40 Earth radii to increase our understanding of geomagnetic storms, aurora, tail and neutral shield, and other magnetospheric phenomena. Principal investigator is Dr. L.A. Frank.

Plasma. Provided by the Los Alamos Scientific Laboratory, AEC, the experiment is to make a comprehensive study of electrons and positive ions in the regions of space traversed by IMP-J and to coordinate them with the magnetometer and other scientific data. The instrument is capable of resolving ions at least as heavy as oxygen and identifying their separation in the energy per charge spectrum when solar wind ion temperatures are low. A plasma analyzer consisting of a set of hemispherical analyzer plates and an electron multiplier together with associated detector electronics, voltage supplies, and logics is employed for measurement. Principal investigator is Dr. S.J. Bame.

Fields

Magnetic Fields. Provided by the Goddard Space Flight Center, the package will measure the vector magnetic field in three dynamic ranges. The sensors will be located at the end of a 305-centimeter (10-foot) boom. The three sensors will allow study of the interplanetary magnetic field, Earth's magnetic tail, and the interaction of the solar wind with the geomagnetic field. Principal investigator is Dr. Norman F. Ness.

DC Electric Fields. Provided by GSFC,this experiment will make vector measurements of the DC electric field with a sensitivity of about 0.1 mv/meter using a biaxial antenna system. Electrometers will measure the potential difference between the two halves of each antenna, permitting exploratory electrostatic field measurements in the solar wind, in the transition region, and in the geomagnetic tail. The results of the DC electric field experiment will be correlated with plasma and magnetic field measurements made on the spacecraft. The experiment is designed to operate at frequencies ranging from DC to 100 Hz and is designed to investigate electric fields on the order of 10 mv/meter for AC signals and 100 mv/meter for DC signals. Principal investigator is Dr. T.L. Aggson.

AC Electric and Magnetic Fields. Provided by the University of Iowa, this array of electric and magnetic field antennas and associated receivers and bandpass filters are used to measure spatial and temporal characteristics of both electric and magnetic AC vector fields and their polar relationships along the IMP-J orbit. The antennas and other spacecraft facilities are shared with another experiment. Electric fields are measured in the range of 0.3 to 59 Hz and electric and magnetic fields are measured in the range of 20 Hz to 200kHz. The purpose of the experiment is to enhance understanding of plasma dynamics, the Earth's shock front and acceleration of particles. Principal investigator is Dr. D.A. Gurnett.

THE IMP-J SPACECRAFT

The IMP-J spacecraft structure has several improvements and modifications which are based on advances in the state-of-the-art and new spacecraft requirements. Geometrically, the structure is a 16-sided drum measuring 135 centimeters (53 inches) in diameter and 157.5 centimeters (62 inches) high. The upper portion of the spacecraft contains an aluminum honey-comb shelf which supports the experiments and associated spacecraft electronics. The lower portion of the IMP-J has a 46-centimeter (18 inch) thrust tube to accommodate the solid propellant kick motor required for circularization of the orbit at the preselected time.

To satisfy stringent radio interference and thermal requirements, the experiment section is fully enclosed in a metallic cover and side panels. Three rings of solar arrays are used to power the experiments and electronics while the spacecraft is in orbit. Two of the rings are mounted above the experiment section and one ring below.

Attached to the exterior of the structure are two diametrically opposed experiment booms, each approximately three meters (10 feet) long and two attitude control system booms, each 1.2 meters (4 feet) long, spaced 90 degrees from the experiment booms. During the launch phase, these booms are folded alongside the spacecraft. Deployment occurs at a predetermined time and sequence and places sensitive magnetic and electric field detectors far from the spacecraft.

Eight small equally-spaced RF antennas (four active; four passive turnstyle type) extend radially from the IMP-J.

Attitude Control System

The IMP-J attitude control system (ACS) is a cold gas (Freon-14) monopropellant system that is used to orient the spacecraft spin-axis perpendicular to the ecliptic plane. The ACS is also used to increase or decrease the spin rate of the spacecraft: prior to the kick-motor firing, if required 40 to 50 rpm; prior to boom deployment, 18 rpm; during normal mission lifetime, 23 rpm.

Optical Aspect System

The optical aspect system consists of a solar sensor, Earth telescope, and associated electronics that provide axis orientation data, spin rate data, and on-board Sun orientation pulses.

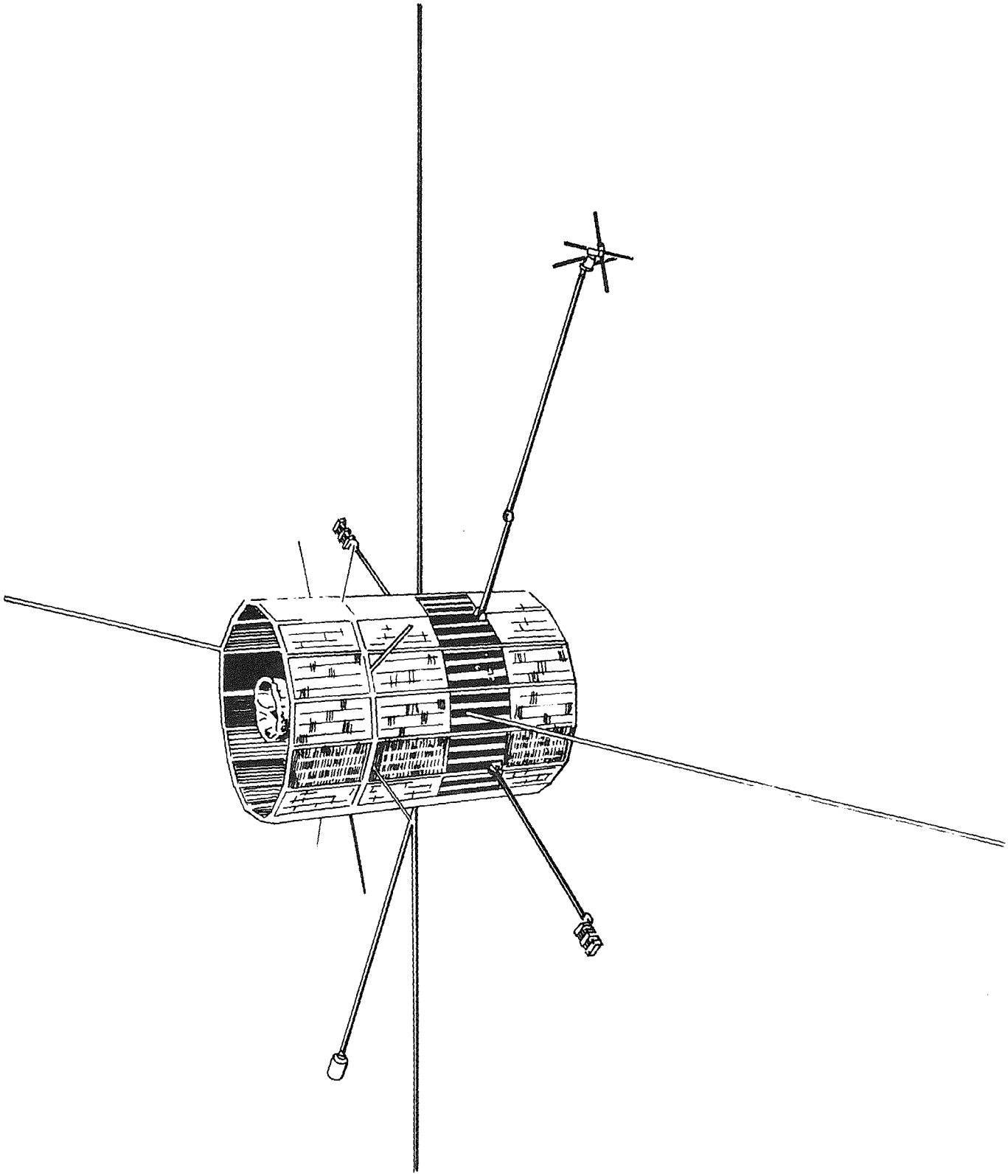

ENGINEERING TESTS

Data System Test (DST)

The DST consists of a Data Multiplex Unit (DMU), an interface box, and a power converter. The objective of the DST is to qualify the DMU and elements of the interface box for flight as central data handling equipment on subsequent spacecraft (IUE, SATS, IME). The DMU differs from the IMP-H unit most significantly in that new ion-implanted p-channel metal oxide silicone (MOS) microcircuits will be used and a new non-systematic 24-bit convolutional code system is employed. The interface box is similar to that in the DST used in the IMP-H spacecraft.

Solar Panel Test (SPT)

The SPT has been proposed as an additional test to fly on the IMP-J spacecraft. The test will be installed on the IMP-J by fabricating one of the 48 solar panels from a high efficiency violet solar cell recently developed by Dr. Lindmayer at the Communications Satellite (COMSAT) Corporation. The new cell has an efficiency of about 13.5% as compared with 11% from present commercial cells. The purpose of the test is to qualify the new Lindmayer cell for use in solar arrays for future missions. The use of the Lindmayer cell for a spacecraft array will result in an increased power-to-weight ratio.

TELECOMMUNICATIONS

Telemetry Subsystem

The IMP-J telemetry system employs two transmitters and a convolutional encoder. Transmitter 1 is used exclusively to transmit convolutional coded or complement coded pulse coded modulation (PCM) data. Power output is 12 watts, and it operates on a frequency of 137,98 megahertz.

Transmitter 2 is used to transmit the range rate data and the special purpose split-phase PCM data from the Data Systems Engineering Test (DST) unit. It can also be used as a backup transmitter for PCM data if Transmitter 1 fails.

Command and Range Rate Subsystems

IMP-J has two command receivers, each operating at a frequency of 148,98 megahertz.

Receiver 1 is used to provide a ranging signal for Transmitter 2, a detected PCM signal for the ranging decoder and a detected AM signal for the PCM command decoder. Receiver 2 provides a detected AM signal for the sequential tone decoder.

Command Receiver 1 and Transmitter 2 provide for an exchange of range and range rate information between the spacecraft and the ground station.

TRACKING AND DATA OPERATIONS

The Spaceflight Tracking and Data Network (STDN) will provide necessary support for the IMP-J mission. Range and Range Rate systems located at Carnarvon, Australia; Tananarive, Malagasay Republic; Rosman, N.C.; Santiago, Chile; and Fairbanks, Alaska will interrogate the spacecraft. STDN minitrack stations will track only during the early orbit phase while the spacecraft signal is of sufficient strength.

STDN stations at Canberra, Australia; Quito, Ecuador; Rosman, N.C.; and Johannesburg, South Africa will be used to transmit PCM commands to IMP-J, in addition to providing telemetry recording coverage.

The STDN stations are scheduled to provide 100-percent telemetry recording coverage, whenever possible, throughout the active lifetime of the spacecraft.

Real time support of spacecraft operations and processing of the scientific data is handled by Mission and Data Operations.

The STDN and Mission and Data Operations are managed by the Goddard Space Flight Center for NASA's Office of Tracking and Data Acquisition.

LAUNCH OPERATIONS

The John F. Kennedy Space Center and its Unmanned Launch Operations Directorate plays a key role in the preparation and launch of the three-stage, Thrust-Augmented Delta rocket carrying the IMP-J spacecraft.

The Delta 98 first and second stages were erected on Complex 17's Pad B on Cape Kennedy during the week of September 10 and six solid strap-on rocket motors were mated with the booster stage. The third stage was built up in preparation for the arrival of the IMP-J spacecraft which was received from the Goddard Space Flight Center, Greenbelt, Md., on September 20. The third stage is a spin-stabilized, solid-propellant motor to which the IMP-J spacecraft is attached.

Upon its arrival, the spacecraft was moved into a "clean room" in Hangar S for final preparations. The spacecraft was mated with the third stage during the second week of October and the combined third stage and spacecraft were erected atop the first two stages shortly thereafter.

A simulated flight test of the launch vehicle and a fit check of the payload fairing which will protect the spacecraft during its flight through the atmosphere were conducted by the NASA/contractor launch team in mid-October.

The Delta/IMP-J countdown is scheduled to begin on October 22 for a launch planned no earlier than October 25. The launch window for October 25 extends from 9:11 through 9:32 p.m. EDT.

DELTA LAUNCH VEHICLE

IMP-J will be launched from the Eastern Test Range, Cape Kennedy, Fla., aboard a three-stage Delta rocket. The launch vehicle, Delta, is 35.4 meters (116 feet) tall, has a diameter of 2.4 meters (8 feet), and weighs approximately 132,000 kilograms (262,000 pounds) at liftoff.

The first stage of the launch vehicle is a modified Thor booster incorporating six Castor strap-on solid fuel rocket motors. The main engine is gimbal mounted to provide pitch and yaw control from liftoff to main engine cutoff. Two vernier engines provide roll control.

The second stage is powered by a liquid-fuel, pressure-fed engine, also gimball-mounted, to provide pitch and yaw control through second stage burn. A nitrogen gas system provides roll control during powered and coast flight, as well as pitch and yaw control after the second stage cutoff.

The third stage is a spin-stabilized, solid-propellant motor to which the IMP-J is attached.

The Delta vehicle will inject the spacecraft into a transfer orbit approximately 196 kilometers (122 miles) altitude by 37 Earth radii, or 236,000 kilometers (147,000 miles). Then 2.5 days (or 7.5 days later) at the apogee of the first (or second) transfer orbit the kick motor aboard the IMP-J will be fired to place the IMP-J into its final, near circular orbit approximately 37 Earth radii, or 236,000 kilometers (147,000 miles), by 32 Earth radii, or 204,200 kilometers 126,900 miles) altitude.

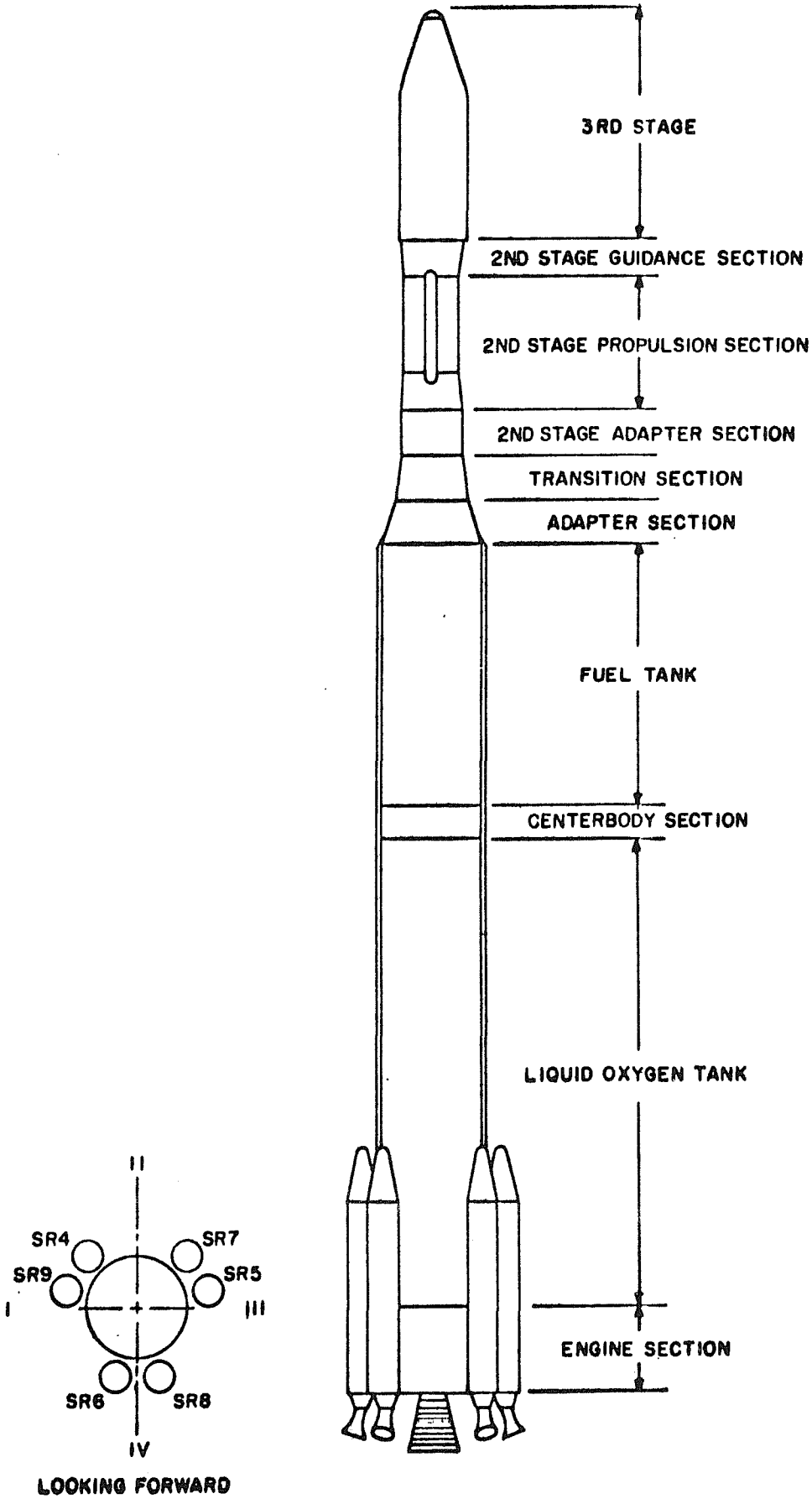

Launch Vehicle

SEQUENCE OF FLIGHT EVENTS

Events	Time after liftoff (Minutes:Seconds)
Liftoff	0:00
Castor motor ignition	0:00
Castor motor burnout	0:38
Solid motor separation	1:25
Main engine (first stage) cutoff (MECO)	4:25
First/second stage separation	4:33
Second stage ignition	4:37
Jettison protective fairing	4:55
Second stage engine cutoff (SECO)	10:03
Start coast pitch program	10:10
End coast pitch program	10:20
Start spin rockets	11:15
Second/third stage separation	11:17
Third stage ignition	11:30
Third stage burnout	12:12
Spacecraft separation	13:55

Spacecraft kick motor ignition	2.5 or 7.5 days

IMP-J MISSION FACTS AT A GLANCE

Launch:	From Complex 17, Eastern Test Range, Cape Kennedy, Florida
Launch Vehicle:	Three-stage Delta rocket with six solid-motor thrust augmenters
Initial Orbit:	Apogee: Altitude 236,000 kilometers (147,000 miles) Perigee: Altitude 196,000 kilometers (122,000 miles)
Final Orbit:	Apogee: Altitude 236,000 kilometers (147,000 miles) Perigee: Altitude 204,200 kilometers (126,900 miles) Period: About 12 days Inclination: 28.8 degrees
Operating Lifetime:	At least one year.
Spacecraft Weight:	298 kilograms (877 pounds)
Structure:	Drum-shaped, 16-sided, measuring 158 centimeters (62 inches) high and 136 centimeters (53.4 inches) in diameter. Consists of an aluminum honeycomb shelf supported by struts and a 46-centimeter (18 inch) diameter thrust tube, 38 centimeters (15 inches) deep. The experiment section is enclosed by metallic cover and side panels.
Appendages:	Two diametrically opposed experiment booms, 305 centimeters (10 feet) long and two attitude control system booms spaced 90 degrees from the experiment booms, 122 centimeters (48 inches) long. Eight radio frequency antennas.

Power System:	Three rings of solar panels on the outer surface of the spacecraft. Provides 130 watts of power at 28 volts during normal spacecraft operation.
Communications and Data Handling:	
Telemetry:	Pulse-Coded Modulation (PCM) operating at 137.980 megahertz, 12 watts.
Encoder and Digital Data Processor:	PCM with digital data storage capability.
Tracking and Data Acquisition:	Stations of the Spaceflight Tracking and Data Network (STDN) operated by the Goddard Space Flight Center.

IMP SERIES STATUS

SPACECRAFT	APOGEE IN EARTH RADII/ KILOMETERS/STATUTE MILES	INCLINATION (degrees)	PRINCIPAL DATA COVERAGE
IMP-A EXPLORER 18	31.7 Re 202,000 km 125,000 mi	33.3	11/27/63-5/6/64 [1]
IMP-B EXPLORER 21	15.9 Re 101,300 km 63,000 mi	33.5	10/4/64-4/9/65
IMP-C EXPLORER 28	41.5 Re 264,400 km 164,300 mi	33.9	5/29/65-5/12/67
IMP-D EXPLORER 33	71.6 Re 456,200 km 283,500 mi	28.5	8/1/66-10/15/71
IMP-E EXPLORER 35	Lunar Orbit	169.0	7/19/67-1/16/71
IMP-F EXPLORER 34	35.4 Re 225,500 km 140,100 mi	66.5	5/24/67-5/3/69 [2]
IMP-G EXPLORER 41	35.4 Re 182,800 km 113, 600 mi	86.8	6/21/69-12/23/72 [2]
IMP-I EXPLORER 43	32.3 Re 205,800 km 127,200 mi	28.6	3/13/71-present
IMP-H	247,000 km 155,000 mi	28.8	9/22/72-present

[1] Following the periods shown, IMPs A,B, and E had extensive periods of intermittent data coverage.

[2] Dates of reentry into Earth's atmosphere.

IMP SPACECRAFT EVOLUTION

	A	B	C	D	E	F	G	H	I	J	
	1	2	3	AIMP-1	AIMP-2	4	5	7	6	8	(units)
wgt. of s/c	138	135	129	207	230	163	175	862	645	877	lbs.
wgt. of Expmts.	43	44	44	25	34	53	58	151	208	181	lbs.
no. of Expmts.	9	9	9	7	9	11	12	13	12	12	
Data rate	25	25	25	28.5	28.5	100	100	1600	1600	1600	ibs (information bits/sec)
Power -total s/c	35.0	37.0	38.4	35.0	35.0	32.6	34.6	124.2	133.0	119.5	watts
Power - Expmts.	10.4	10	10	5.1	4.9	12.8	14.5	49.4	56.0	41.9	watts
Explorer #	18	21	28	33	35	34	41	47	43	50	
Delta #	21	26	31	39	50	49	69	90	83	98	
Launch Date	Nov 26 1963	Oct 3 1964	May 29 1965	Jul 1 1966	Jul 19 1967	May 24 1967	Jun 21 1969	Sep 22 1972	Mar 13 1971	Oct 25 1973	

-more-

IMP SERIES RESULTS

The series of IMPs launched since November 1963 to study and monitor the plasmas, magnetic fields and energetic particle populations of interplanetary space have provided the first accurate measurements of the interplanetary magnetic field, the magnetosphere boundary, and the shockwave associated with the interaction of the geomagnetic field and solar wind. The detection of the extended geomagnetic tail - plasma sheet represents the most important result with respect to Earth's magnetic field.

Included in the IMP program are two Anchored Interplanetary Monitoring Platform spacecraft, AIMP-D (Explorer 33) and AIMP-E (Explorer 35), launched in 1966 and 1967 respectively. Explorer 35 was placed in lunar orbit and still orbits the Moon. Explorer 33 went into an orbit around both Earth and the Moon. The two made significant contributions to scientific knowledge and understanding of the near lunar and interplanetary environment, including the finding that the Moon has a negligible large scale magnetic field and that a solar wind cavity void exists behind the Moon.

IMP scientific findings contributed greatly to the understanding of the solar-lunar-terrestrial relationships. Key accomplishments include:

* First accurate measurements of the interplanetary magnetic field.

* First mapping of the shock front boundary of the magnetosphere and the turbulent transition region -- the magnetopause -- behind the boundary.

* First detailed information on the magnetosphere tail region.

* First evidence of a magnetically neutral area in the magnetosphere tail -- called the neutral sheet -- caused by magnetic lines of force moving in opposite directions.

* First evidence of energetic electrons in the neutral sheet which may be the source of radiation causing auroras as well as replenishment of the Van Allen radiation belts.

* First "operational" cosmic ray early-warning capability to protect astronauts from dangerous solar flare radiation.

In addition, the IMP series has made major contributions to the following inportant engineering developments:

* The onboard data handling system -- the digital data processor -- which enables the experimenter to encode his data in the most efficient way while simplifying his experiment construction and spacecraft integration task.

* Metal oxide silicon field effect transistors (MOSFET) used for the first time in onboard data handling systems in space providing increased power with considerable decrease in weight.

* Standard methods for designing, fabricating and testing magnetically clean spacecraft conceived and developed in IMP series and used in other programs, for example, Pioneers 10 and 11 enroute to Jupiter.

A detailed list of some of the more important IMP series results and scientific groups reporting them follow:

Goddard Space Flight Center

Data received and interpreted by GSFC experimenters has resulted in the largest and most comprehensive data set of observations of the interplanetary magnetic field ever obtained. In addition, the IMPs have provided initial estimates of the electrical conductivity and temperature distribution in the Moon as well as interplanetary magnetic field phenomena that can be correlated with terrestrial measurements.

The spacecraft have also provided a number of firsts including the following:

-- First extensive observations of the interaction of the magnetized solar wind with the geomagnetosphere.

-- First determination of the geometry and structure of the bow shock surrounding the geomagnetosphere.

-- First determination of the geometry and structure of the magnetopause surface separating the turbulant solar wind from the distorted geomagnetic field.

-- First mapping of the geomagnetic tail beyond the lunar orbit.

-- First measurements and definition of the extended tail of the magnetosphere and the neutral sheet.

-- First accurate measurements of the interplanetary magnetic field and discovery of the sector structure of the interplanetary medium.

-- First correlation of the interplanetary magnetic field with solar magnetic field measurements showing that the interplanetary magnetic field comes from the Sun.

-- First observations of the interaction of the magnetized solar wind with the Moon.
Investigator: Dr. N.F. Ness

All four plasma experiments have contributed to the study of the solar wind including the first separation of helium and other ions from hydrogen in the solar wind as well as the separation of helium, oxygen and hydrogen. Resulting data, including the first systematic study of interplanetary shocks, studies of the flow field following such shocks and the occurrence of disturbances in the solar wind, are being used to study the variation of helium to hydrogen ratio with solar activity.
Principal investigator: Dr. K.W. Ogilvie

The first independent confirmation of the Los Alamos discovery of cosmic gamma-ray bursts was made using the Interplanetary Electron - Solar X-ray detector on IMP-6. These observations provided the first measurement of the energy spectra of the bursts and showed that their typical energy release peaked in the 150-keV region, between the usual X-ray and gamma-ray domains characteristic of all other known astrophysical objects.

A great improvement in the IMP-6 interplanetary electron spectrum was provided by the successful exposure of the improved detector on IMP-7. The electron spectrum is now known to have a distinct break at 100 keV, such that a separate spectral component is exhibited between 0.1 and 20 MeV.
Investigator: Dr. T.L. Cline

Jet Propulsion Laboratory, Pasadena, California

The Caltech Electron/Isotope Spectrometer in IMP-H (Explorer 47) is providing precise measurements of cosmic rays which travel through interplanetary space at almost the speed of light. Data are being used to study the regions where these particles originate, the galaxy and our Sun, and their motion through space to the Earth.

The number of very low energy electrons was found to be much smaller than indicated by earlier experiments, and their intensity was found to vary from day to day.

An important aspect of the study of cosmic ray electrons is to determine whether any of the electrons have positive electrical charge. So far the Caltech scientists have determined that less than 20 per cent of the low energy electrons have positive charge, and less than 1 per cent of cosmic ray electrons from the Sun are positrons.

In addition, measurements indicate that the amount of cosmic ray deuterium is considerably lower than expected, a result that has important implications for understanding the history of cosmic rays before they reach Earth.
Investigator: Dr. E.C. Stone

Bell Laboratories, Murray Hill, N.J.

First spacecraft measurements, with good time and spectral resolution, of the solar protons and alpha particles in the energy range 0.5 to 20 MeV/nucleon.

First extensive study, with good spectral and time resolution, of the alpha particle composition of solar flare events as a function of time during the event.

First demonstration with data with good spectral and time resolution, that classical diffusion (propagation) models were invalid for low energy solar particles.

First measurements and studies of the effects of interplanetary shock waves on the relative changes in the interplanetary proton and alpha particle populations.

First extensive use of low energy interplanetary solar particle data (together with similar data from ATS-1) to study the access of solar particles to the synchronous altitude trapping regions of the magnetosphere.
Investigator: L.J. Lanzerotti

University of Texas at Dallas

Some of the more important findings of the Cosmic Ray Group are:

The frequency of occurrence of solar flares capable of accelerating 1-10 MeV particles is much larger than for higher energy particles.

Large field aligned anisotropies (40-80 percent) are observed during the rise time of the proton solar events.

During the early part of the decay of the proton flare event, the cosmic ray population exhibits radial equilibrium anisotropy varying inversely with the particle velocity and directly with the solar wind velocity.

At very late times during the decay of several solar proton events, the anisotropy was found to be such that the maximum intensity was being recorded from a direction approximately 45 degrees East of the Earth-Sun line.

The dependence of the equilibrium anisotropy on the energy or the velocity of the particles and on plasma velocity were shown to be in agreement with theoretical predictions.

The direction of the eastern anisotropy is independent of the direction of the interplanetary magnetic field vector.

Experimenters were able to reproduce better the observed constancy of cosmic ray anisotropy direction.

The probability of observing electrons released by a solar flare is a strong function of the solar longitude of the parent flare.

The rise time of solar electron events is shorter compared to those of the proton events.

Solar electrons of high energy exhibit anisotropies of lesser magnitude than those of low energy protons.

Decay of the proton and electron anisotropies are in agreement with existing diffusive models of propagation of those particles from the Sun to Earth.

Interplanetary magnetic sector crossings during a solar flare proton event cause abrupt reversals in the direction of the anisotropy during the initial phase of the anisotropy.

A new type of low energy proton increases was found to occur with the commencement of a magnetic storm.

Solar x-rays and solar flare correlation studies showed larger and brighter flares tended to occur with the more intense x-ray bursts.
Investigator: R.A. Palmeira and F.R. Allum

TRW Systems Group

Strong low frequency electromagnetic noise in the distant plasma sheet has been discovered, but it is as yet unknown how the noise levels vary with changing geomagnetic and spatial conditions.

Broadbanded electrostatic plasma wave turbulence in a plasma sheet "boundary layer" has been detected which is associated with streaming protons.
Investigator: Dr. F.L. Scarf

Ames Research Center, Mountain View, California

The Ames plasma analyzer provided the first systematic mapping of the Earth's bow shock and magnetosheath flow field associated with the interaction of the solar wind with the geomagnetic field.

First showed that a residual field was often present when the IMP spacecraft crossed the null sheet. At the same time, results from this experiment showed basic asymmetry in the tail field which remains unexplained.

IMP results were vital for much of the Apollo Lunar Surface Magnetometer (ALSM) experiments when comparisons of the interplanetary field taken by Explorer 35 and the surface field experiments using ALSM enabled experimenters to deduce for the first time a profile of the bulk electrical conductivity of the lunar interior. In addition a diamagnetic cavity on the antisolar side of the Moon was discovered along with the existence of a lunar magnetosphere. These experiments have resulted in the preparation of a map of probable locations of permanent lunar surface magnetic fields.
Investigator: Dr. C.P. Sonett and Dr. John N. Wolfe

University of California, Los Alamos Scientific Laboratory

For the first time, distinct interpenetrating ion streams with two different bulk speeds have been found to be present in the solar wind on occasion. Differences between the two streams as high as 100 km sec^{-1} (about 200,000 miles per hour) have been observed. These completely unexpected and unpredicted double streams have been shown not to be associated with the Earth's bow shock. It is thought that the ions in the double streams come from different volumes of the solar coronal gas.

Electrons in the solar wind provide most of the capability for the conduction of heat from the million-degree corona outward into interplanetary space. The size of the energetic component is a measure of the heat conducted away from the Sun. IMP data show energetic electrons travel back toward the Sun from the Earth's bow shock when the interplanetary magnetic field lines thread through the shock. The solar wind seems to reach a saturation point allowing only a limited amount of heat to flow through it. The reason appears to be that when the heat begins to exceed certain values, waves are generated which scatter the outward streaming hot electrons, impeding the flow.

In the past the solar wind has been popularly considered to exist in a thermal state.

This picture, which has been generally accepted and thought to be substantiated by previous solar wind observations, has been shown to be grossly inaccurate much of the time. The heat conducted by the electrons has been shown to reach a saturation value instead of continuing to rise as the temperature gradient is increased. At other times, when two interpenetrating/ion streams are not obviously present, careful evaluation of the velocity distributions often shows pronounced distortions of the high random velocity tail along the field. It is as though the distribution may have once been double yet has not been able to relax to a single thermal distribution. The conclusion is that the solar wind is most often non-thermal, requiring a complete re-evaluation of the nature of the solar wind flow.
Investigator: Dr. S.J. Bame

Johns Hopkins Applied Physics Laboratory, Silver Spring, Md.

The Solar Proton Monitoring Experiments have provided continuous information on energetic solar protons since May 1967 with routine publication of hourly averaged fluxes of protons with energies greater than 60, 30, and 10 MeV in the Solar-Geophysical Data Bulletins issued monthly by NOAA, Boulder Colorado. Real time monitoring has been carried out in support of all Apollo and Skylab missions. The monitoring data have been used as the basis for, or in support of, many studies by investigators in many countries, and frequently serves as base-line for other satellite particle experiments.
Investigator: Dr. Carl Bostrom

University of Maryland

Analysis of only part of the available data has resulted in discoveries of fundamental importance to our understanding of particle origin and acceleration mechanisms near the Sun and in interplanetary space. These include:

-- Discovery of a steady flux of interplanetary carbon, oxygen and heavier elements at energies as low as several hundred keV per unit mass. If, as is likely, these particles are of solar origin, the Sun is an efficient accelerator of particles not only during the well known solar flare erruptions but also at all other times.

-- First direct measurements of the charge states of 100 keV per unit mass solar carbon and oxygen nuclei.

-- Extension of observations of solar carbon, oxygen and iron nuclei energy spectra and abundances to several hundred keV per unit mass. Both observations are very important to understanding the mechanisms of particle acceleration at the Sun.

-- Observations of particle acceleration by annihilation of magnetic fields by interplanetary space.
Investigator: Dr. G. Gloeckler

IMP-J SCIENTIFIC EXPERIMENTS, ORGANIZATIONS, AND PRINCIPAL INVESTIGATORS

XPERIMENT	CONTRIBUTING ORGANIZATION	PRINCIPAL INVESTIGATOR
	Energetic Particles	
Cosmic Ray	Goddard Space Flight Center	Dr. F. B. McDonald
Cosmic Ray	University of Chicago	Dr. J. A. Simpson
Energetic Particles	National Oceanic and Atmospheric Administration	Dr. D. J. Williams
Charged Particles	Applied Physics Laboratory/Johns Hopkins University	Dr. S. M. Krimigis
Electrons and Isotopes	California Institute of Technology	Dr. E. C. Stone
Ion and Electron	University of Maryland	Dr. G. Gloeckler
Low Energy Particles	University of Iowa	Dr. L. A. Frank
	Fields	
Magentic Fields	Goddard Space Flight Center	Dr. N. F. Ness
DC Electric Fields	Goddard Space Flight Center	Dr. L. T. Aggson
AC Electric and Magnetic Fields	University of Iowa	Dr. D. A. Gurnett
	Plasma	
Solar Wind	Los Alamos Scientific Laboratory	Dr. S. J. Bame
Solar Wind	Massachusetts Institute of Technology	Dr. H. S. Bridge

- more -

IMP-J PROGRAM OFFICIALS AND CONTRACTORS

NASA Headquarters

Dr. John E. Naugle	Associate Administrator for Space Science
Vincent L. Johnson	Deputy Associate Administrator for Space Science
John R. Holtz	Program Manager, Explorers and Sounding Rockets
Raymond Miller	Deputy Program Manager, Explorers and Sounding Rocket
Dr. E.R. Schmerling	Chief of Magnetospheric Physics
Dr. L.D. Kavanagh, Jr.	IMP-J Program Scientist
Joseph B. Mahon	Director of Launch Vehicle and Propulsion Program
I.T. Gillam IV	Manager, Small Launch Vehicles and International Projects

Goddard Space Flight Center

Dr. John F. Clark	Director
Robert C. Baumann	Director of Space Applications and Technology (Acting)
Paul Butler	Chief, Explorer Projects Office
William R. Limberis	Project Manager
Dr. Norman Ness	Project Scientist
Dr. James Trainor	Assistant Project Scientist
Martin Davis	Experiment Manager
Stephen Paddack	Project Operations Director/Spacecraft Manager
Franz W. Hoffmann	Project Coordinator
Leonard Ripley	T&E Test Manager
Ernest Doutrich	Quality Assurance
Ton Eng	Mechanical Systems

Theodore Goldsmith	Electrical Systems
William R. Schindler	Launch Vehicle Manager
Thomas C. Moore	Mission and Operations System Manager/Mission Support Manager
John Quill	Network Support Manager
Robert Coady	Flight Director
Daniel Muhonen	Mission Analyst

Kennedy Space Center

Dr. Kurt H. Debus	Director
John J. Neilon	Director, Unmanned Launch Operations
Hugh A. Weston, Jr.	Manager, Delta Launch Operations
William R. Fletcher	Manager, Delta Spacecraft Operations

Contractors

IMP-J -- FMR-Aerospace Sciences, College Park, Md., built the spacecraft and electrical harness, integrated spacecraft subsystems, and assisted in environmental testing, and launch support.

Delta Launch Vehicle -- McDonnell Douglas Astronautics Co., Huntington Beach, California

-end-