NATIONAL AERONAUTICS AND
SPACE ADMINISTRATION
Washington, D. C. 20546
202-755-8370

FOR RELEASE:

PRESS KIT

PROJECT: MARINER 10
(Mariner Venus Mercury '73

contents

GENERAL RELEASE 1-5
MISSION 6-8
MAJOR MISSION EVENTS 9
SPACECRAFT 10
Spacecraft Description 11-13
Launch Configuration 13
Communications 13-14
Commanding the Spacecraft 14-15
Downlink Telemetry 15
Tracking the Spacecraft 16
Central Computer and Sequencer . . . 16-17
Attitude Control 17-18
Propulsion 18-19
Power 19
Temperature Control 20
Scan Platform 20
PLANETARY CHARACTERISTICS 21
VENUS 22
MERCURY 23
SCIENTIFIC EXPERIMENTS 24-27
Extreme Ultraviolet 28
Infrared Radiometer 28-29
Radio Science 29
Plasma Science 29-30
Television 30
Charged Particle Experiment 31
Magnetometer 31
TRACKING AND DATA SYSTEM 32-33

LAUNCH OPPORTUNITY AND WINDOWS 34
LAUNCH VEHICLE 35-36
Launch Vehicle Characteristics . . . 37
Flight Sequence 38-39
Flight Events 40
LAUNCH OPERATIONS 41-42
MISSION OPERATIONS SYSTEM 42
IMAGE PROCESSING LABORATORY 43
MARINER 10 SCIENCE INVESTIGATORS 44-45
MARINER VENUS MERCURY TEAM 46-48
MARINER VENUS MERCURY SUBCONTRACTORS . . . 49-50
CONVERSION TABLE 51

NATIONAL AERONAUTICS AND SPACE ADMINISTRATION
Washington, D. C. 20546
AC 202/755-8370

FOR RELEASE:

Monday, October 29, 1973

Nicholas Panagakos
Headquarters, Washington, D.C.
(Phone: 202/755-3680)

Robert J. MacMillin
Jet Propulsion Laboratory, Pasadena, Calif.
(Phone: 213/354-5011)

RELEASE NO: 73-214

Mariner - 10 (Mariner Venus Mercury'73)

The United States will launch an unmanned spacecraft to the planet Mercury about November 3 from the Kennedy Space Center, Fla., aboard an Atlas/Centaur rocket.

Mariner 10 will be the first spacecraft to use the gravity of one planet, Venus, to reach another. It also will be the first to explore Mercury, the smallest planet in the solar system and the planet nearest the Sun.

Television cameras will take about 8,000 pictures of the two planets.

-more-

October 17, 1973

The 503-kg. (1108-lb.) spacecraft will sweep by cloud-shrouded Venus at an altitude of about 5300 km. (3300 miles) on February 5, 1974. Venus' gravity will bend the trajectory and decrease the speed of the spacecraft, allowing Mariner to cross the orbit of Mercury on March 29, 1974 and fly-by the planet at a distance of about 1000 km. (621 miles).

Mariner 10 instruments will explore the atmosphere, surface and physical characteristics of Mercury, as well as obtain data at Venus and during the cruise phases between Earth and Venus and between Venus and Mercury.

In addition to television photography, scientific investigation include magnetic field and plasma measurements, infrared radiometry, ultraviolet spectroscopy and radio science (occultation and celestial mechanics). An experimental x-band, high frequency transmitter will be flown for the first time in support of the occultation and celestial mechanics experiments.

The two television cameras equipped with 1500-mm. Cassegrain telescopes, should give Earth-bound scientists a good look at Mercury's surface. Full mosaics of the lighted disc of Mercury will be at 1 to 1.5 kilometer resolution, with selected coverage up to 100 meters. At Venus, the ultraviolet experiment and TV, using UV filters, will study high-speed cloud movement seen in the UV from Earth.

Principal experimental periods are from encounter minus 35 minutes to E+3 days at Venus, and E-16 hours to E+16 hours at Mercury. Extensive far-encounter images will be taken up to 17 days past Venus, and from 7 days before and 13 days after Mercury encounter. While Earth occultation occurs at both planets, Sun occultation occurs at Mercury only.

The gravity-assist technique is a no-cost source of energy for a flight mission, substituting for additional rocket power. Without it, either a larger, more expensive booster, or a smaller payload, would be required.

The Mariner 10 experience with a gravity-assisted multi-planet mission, with attendant precision navigation and trajectory correction techniques, will be a forerunner for future flights such as the Mariner Jupiter/Saturn mission in 1977-81.

The launch window extends from November 3 to November 25, 1973. November 3, late night November 2 on the West Coast, has been selected as the prime launch date to obtain the highest science data return from the mission. Only one spacecraft is planned to be launched.

The parking orbit technique will be used to launch Mariner 10. Centaur engines will cut off at about 9 1/2 minutes after liftoff, followed by an Earth orbit coast for up to 25 minutes. Venus transfer trajectory will be achieved after Centaur restart and a two-minute burn.

Following the launch, tracking and data acquisition will be performed by the Deep Space Network with stations in California, Spain and Australia. At planet encounter, high-rate data will be received with the DSN's 64-meter (210 foot) antenna subnet.

Two correction maneuvers of the spacecraft's trajectory will be executed between Earth and Venus and two more between Venus and Mercury. Earth-planet distances at the Venus and Mercury encounters will be about 45 million kilometers (28 million miles) and 150 million kilometers (93 million miles). respectively.

NASA's Office of Space Science has assigned the Venus/Mercury project to the Jet Propulsion Laboratory of the California Institute of Technology. The Boeing Co., Seattle, is responsible for the spacecraft under JPL contract.

Launch vehicle responsibility has been assigned to NASA's Lewis Research Center, Cleveland, Ohio. The contractor to Lewis is General Dynamics/Convair, San Diego, Calif.

Tracking, communications and mission operations are conducted by JPL, which operates the Deep Space Network for NASA's Office of Tracking and Data Acquisition.

Exclusive of the launch operations, basic cost of the mission is $98 million.

[END OF GENERAL RELEASE. BACKGROUND INFORMATION FOLLOWS]

MISSION

To meet the demands of the gravity assist technique, Mariner 10 must be launched on an orbit around the Sun that will intercept the planet Venus with a precision of 1000 to 1. An uncorrected one-mile miss at Venus translates into a 1000-mile miss at Mercury.

The Venus/Mercury mission will require four trajectory corrections, two prior to aenus encounter and two after Venus but prior to Mercury encounter. Within limits, the corrections will cover launch errors and errors in our knowledge of the orbit of Venus, and will provide fine tuning for both planet encounters.

The Venus fly-by altitude, will be about 5300 km (3000 miles). The altitude at closest approach to Mercury will be 1000 km (621 miles).

As Mariner 10 approaches Venus, the planet's gravitational attraction will alter the spacecraft's flight path and speed relative to the Sun. The spacecraft's velocity is reduced (relative to the Sun) allowing it to fall in closer to the Sun and crossing Mercury's orbit at the exact time for encounter.

If the spacecraft were not slowed, its speed would be too high to allow the Sun's field to pull it towards the orbit of Mercury, and Mariner would only dip slightly inside the orbit of Venus.

Without the technique of gravity-assist, a direct launch to Mercury would require a larger, more expensive launch vehicle or a lighter payload with fewer science experiments.

Following lift-off, Mariner 10 will be placed in a parking orbit for up to 25 minutes. Centaur cut-off prior to the parking orbit will occur at 9 1/2 minutes after lift-off.

A two-minute burn after Centaur re-start will place Mariner 10 in an orbit around the Sun and on a trajectory to Venus. The launch direction will be backwards from Earth, opposite the motion of the Earth around the Sun. This is required to provide a lower velocity for the spacecraft's Sun orbit than Earth's velocity of approximately 66,000 mph. The spacecraft cannot be drawn inward towards the orbit of Venus by the Sun's gravitational attraction, unless it is traveling slower than Earth.

MARINER VENUS - MERCURY FLIGHT PATH

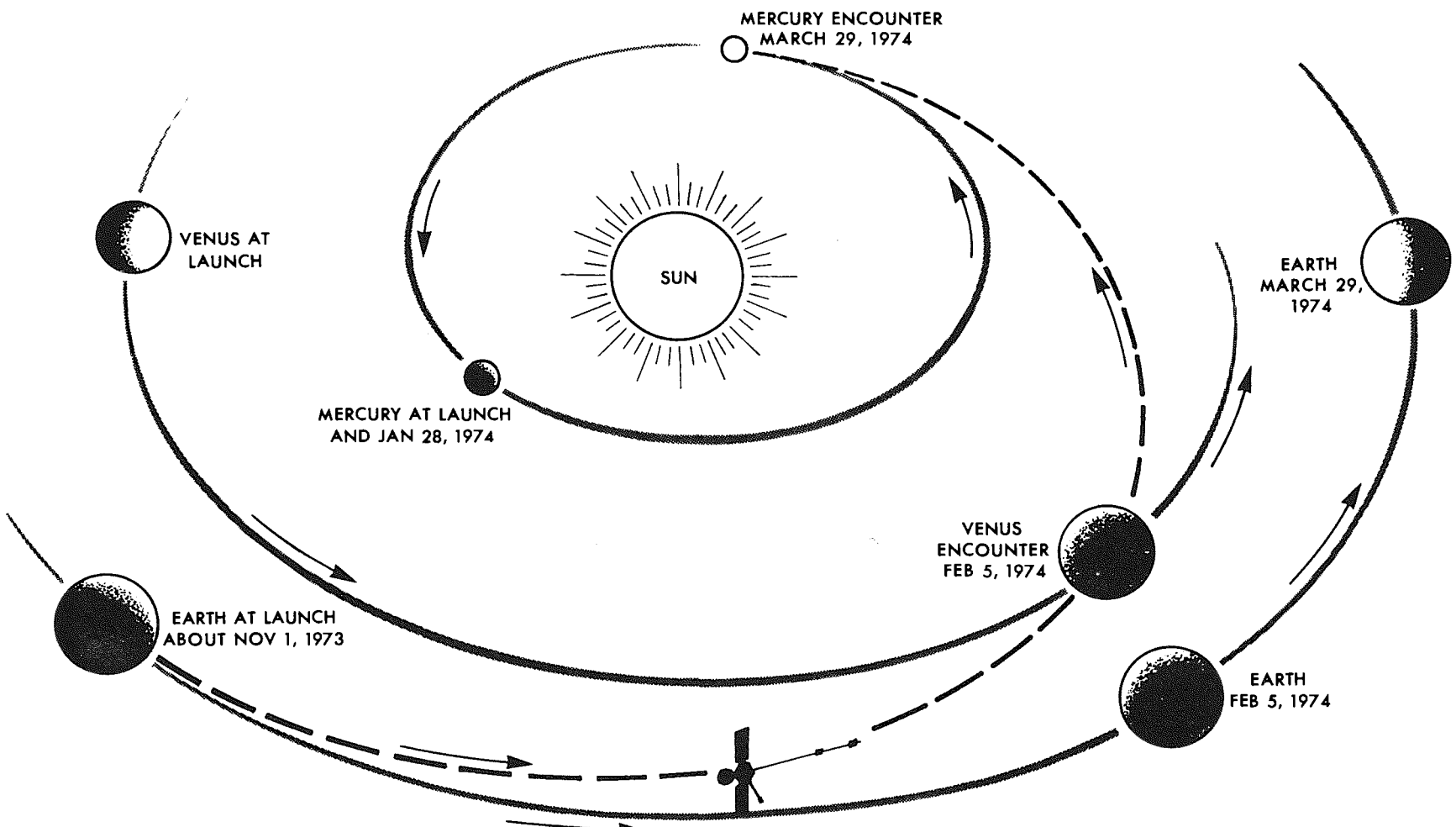

Calibration of instruments aboard the spacecraft will be performed during the cruise to Venus, beginning with photography of the Earth and the Moon. Nine Earth-Moon sequences are planned.

The cloud cover of Earth is expected to approximate the Venus cloud cover for exposure calculations and operational tests of the cameras in space. The Moon's rugged surface and lack of atmosphere will simulate Mercury for calibration and testing.

The ultraviolet airglow spectrometer will also scan Earth to measure the hydrogen-helium corona and the plasmasphere, and will scan the Moon to measure its reflective properties at extreme ultraviolet wavelengths.

In mid-January, observations of the comet Kohoutek using the television and ultraviolet experiments may be performed. The comet will be about 65 million miles from the spacecraft.

To guard against the possible loss of command communications from Earth, Mariner's on-board central computer and sequencer will be programmed to automatically conduct limited planetary encounter sequences.

Seven days after launch it will be programmed for a Venus encounter. Should communications be lost during this phase, at least some science data return would be insured.

The instructions will be updated in the computer memory by a full science sequence 12 days prior to Venus encounter.

Two days following Venus encounter, the computer will be programmed for an automatic Mercury sequence which will be updated prior to Mercury encounter.

Venus encounter occurs on Feb. 5, 1974. Prior to encounter, the spacecraft will be approaching on the dark side of Venus and photography will not begin until 28 minutes prior to the point of closest approach. The non-imaging science experiments, however, will begin on Feb. 2, and will continue until Feb. 22 as the spacecraft pulls away from the planet.

The Earth-to-Venus and Venus-to-Mercury cruisephases again will be used for science measurements in the interplanetary medium. While in the vicinity of Venus, a photographic search for possible Venus Moon or Moons will be made.

Observations of Mercury will begin six days prior to the March 29th encounter and continue for 19 days. The spacecraft will then continue in Sun orbit with a second Mercury encounter possible on Sept. 22, 1974.

During the mission, as the spacecraft draws closer to the Sun, the solar panels will be tilted to reduce heating. Approximately five solar panel adjustments will be made.

An experimental x-band transmitter will be carried on the mission. It will not transmit primary spacecraft data but will be used for measuring the distance from Earth to spacecraft and for occultation and celestial mechanics experiments. These data are expected to be improved by using both x-band and the standard s-band frequencies.

Arrival times at Venus and Mercury will coincide with the view periods of the 64-meter (210-foot) antenna at Goldstone, Calif., the only antenna equipped to receive x-band. Mercury encounter, however, will also involve the 64-meter (210-foot) antenna at Australia.

MARINER VENUS/MERCURY '73

MAJOR MISSION EVENTS

November 3, 1973	Launch (Approx. 12:45 a.m. EST)
November 3, 1973	Earth and Moon TV
November 4, 1973	Earth and Moon TV
November 6, 1973	Earth and Moon TV
November 9, 1973	Earth and Moon TV
November 13, 1973	First Trajectory Correction Maneuver (TCM-1)
January 18, 1974	TCM-2
February 2, 1974	Start Venus Science
February 5, 1974	Start Venus TV
February 5, 1974	Venus Closest Approach (Approx. 12 Noon EST)
February 9, 1974	TCM-3
February 22, 1974	End Venus TV
March 1, 1974	TCM-4
March 23, 1974	Start Mercury TV
March 29, 1974	Mercury Closest Approach (Approx. 3 p.m. EST)
April 11, 1974	End Mercury TV
April 13, 1974	End Basic Mission

MARINER VENUS-MERCURY

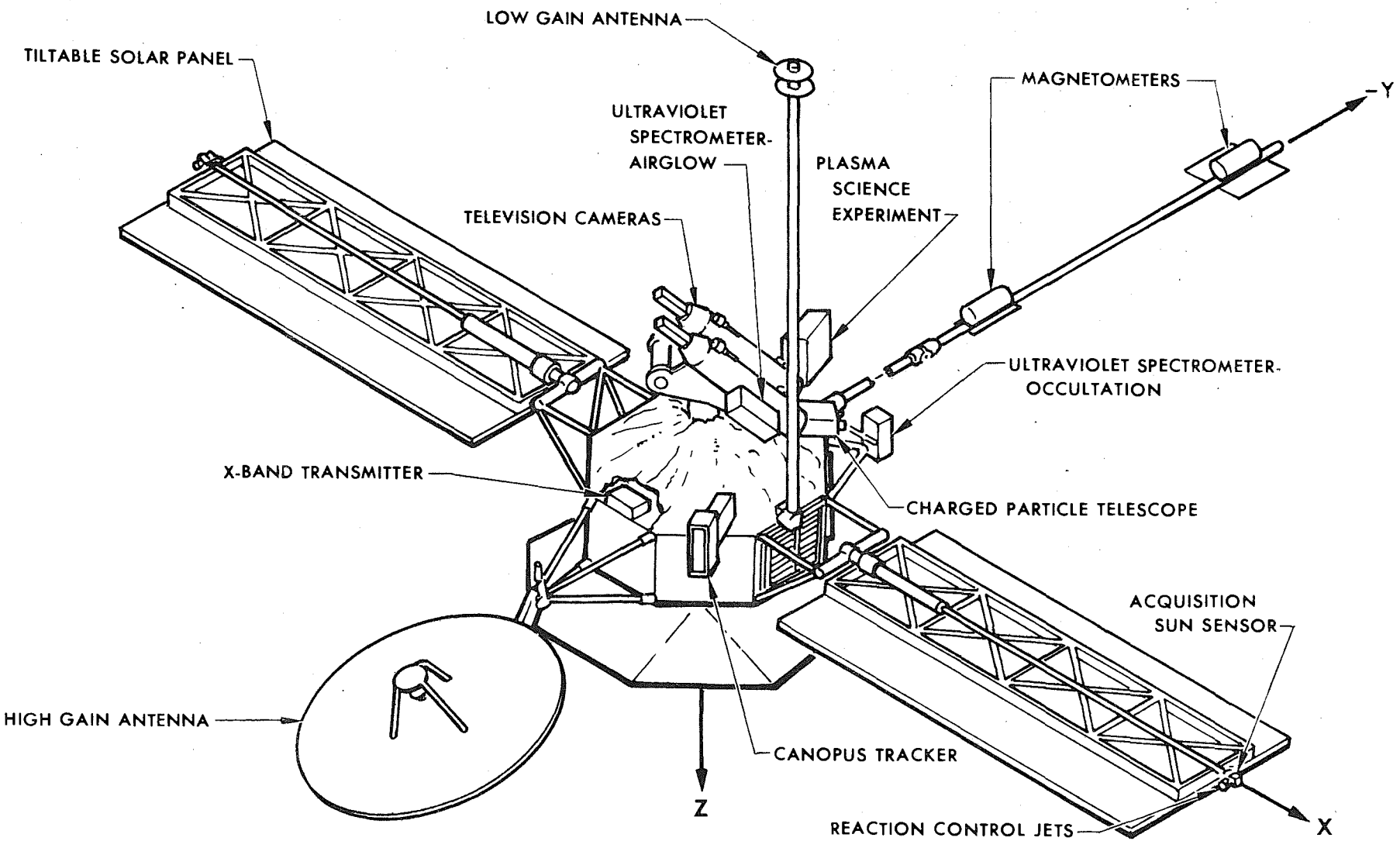

Spacecraft Description

Mariner's basic structure is an 18.15-kilogram (40-pound) eight-sided forged magnesium framework with eight electronics compartments. The structure measures 1.39 meters (54 1/2 inches) diagonally and 0.457 meters (18 inches) in depth.

Two solar panels, each 2.7 meters (106 inches) long and 0.97 meters (38 inches) wide, are attached by outriggers to the top of the octagon. Together, the panels support 5.1 square meters (54.9 square feet) of solar cell area.

The spherical propellant tank for Mariner's liquid-fueled rocket engine occupies the center cavity of the octagonal structure. The engine nozzle protrudes from the bottom or sunward side of the octagon and through the center of the deployable heat shield.

Two sets of reaction control jets consisting of three pairs of jets each, which stabilize the spacecraft on three axes, are mounted at the tips of the solar panels and on outrigger structures supporting the high gain antenna and magnetometer booms. Titanium bottles containing the nitrogen gas supply for the dual attitude control system and regulators for the system are mounted on the top ring of the octagon.

The low-gain omnidirectional antenna is formed by two conical plates slotted into the outer end of a pair of concentric tubes, which act as a coaxial feed to the antenna. The tubes extend 2.85 meters (112 inches) from the top of the octagon and are 2.54 centimeters (1 inch) and 5.72 centimeters (2 1/4 inches) in diameter.

The motor-driven high-gain antenna consists of an aluminum honeycomb dish reflector, 1.37 meters (54 inches) in diameter and parabolic in cross-section, and a jointed boom attached to the spacecraft octagon by an outrigger structure. Capability to move the antenna on two axes permits pointing at Earth in all directions except those obscured by the spacecraft. Feeds enabling transmittion at S-band and X-band frequencies are supported on a truss structure at the focus of the parabola (focal length is 55 centimeters, or 21.6 inches).

The Canopus star tracker assembly is located on the upper ring structure of the octagon. Acquisition sun sensors are at the tips of the solar panels for a total spherical field of view. Cruise sun sensors are mounted on an outrigger supporting the magnetometer boom.

Five of Mariner's eight electronics compartments are temperature controlled by louver assemblies on the outer surfaces. Interior of the octagon is insulated by multilayer thermal blankets at both top and bottom of the structure. A sunshade, deployed after launch, protects the spacecraft on the side directly facing the Sun.

The spacecraft will carry science instrumentation for six experiments. A seventh--celestial mechanics and radio science--requires only the signal from the spacecraft transmitters, S-band and X-band, as the source of its data.

Two identical television cameras and their telescope assemblies are mounted on a motor-driven scan platform on the top or shaded side of the spacecraft. An ultraviolet airglow spectrometer, which also requires tracking of the target planets, is positioned alongside the TV cameras.

A second element of the ultraviolet experiment, the UV occultation spectrometer, and a charged particle telescope are body-fixed to the spacecraft octagon.

A six-meter (20-foot) hinged boom supports two magnetometers--one at the end of the boom and the second about four meters from the spacecraft. The boom is deployed perpendicular to the long axis of the spacecraft.

-more-

Plasma science experiment detectors are mounted on a short motordriven boom which provides unobstructed viewing beyond the spacecraft and its sunshade. The infrared radiometer is located on the spacecraft end of the boom.

Launch weight of the spacecraft is about 528 kilograms (1160 pounds) including 29 kilograms (64 nitrogen gas and 30 kilograms (66 pounds) associated with the Mariner-Centaur adapter. Payload instrument weight is about 78 kilograms (172 pounds).

Launch Configuration

Some mechanical elements of the spacecraft must be rigidly restrained during the severe launch vibration environment. Following the launch phase, appendages, which were latched securely within the Centaur stage nose fairing, are deployed to their cruise positions.

The spacecraft pyrotechnic subsystem provides simple and positive deployment with explosive squibs. Devices stowed securely during launch and released for deployment by the pyrotechnic subsystem are the solar panels, low-gain antenna, magnetometer boom, high-gain antenna boom and antenna dish, plasma science experiment boom and plasma science instrument protective cover.

The pyrotechnic subsystem also routes power to the propulsion sub-system to open and close the engine solenoid valve.

Communications

Two-way communications with Mariner will be by radio link between Earth tracking stations and a dual transmitter-single receiver radio system aboard the spacecraft.

The on-board communications system also includes a flight data subsystem (FDS), modulation/demodulation subsystem (MDS), data storage subsystem (DSS) and high-gain and low-gain antennas.

The telemetry modulation unit (TMU) of the MDS feeds data to the downlink. The flight command unit (FCU) routes ground commands received by the spacecraft.

The Mariner S-band receiver will operate continuously during the mission at about 2113 megaHertz. The receiver will be used with the low gain antenna only. The spacecraft receives uplink command and ranging signals from ground stations of the Deep Space Network.

When no uplink signal is being received by Mariner, the transmitted frequency of about 2113 megaHertz originates in the spacecraft transmitter. The transmitter consists of two redundant exciters and two redundant radio frequency power amplifiers of which any combination is possible. Only one exciter-amplifier combination will operate at any one time. Selection of the combination will be by on-board failure detection logic with ground command backup.

Both amplifiers employ traveling wave tubes and are capable of operating at 10 watts or 20 watts output. The signal may be transmitted through either the high-gain or low-gain antenna. Transmission via the high-gain antenna will be required at both planet encounters and during tape recorder playbacks.

The high-gain antenna, with a 1.37-meter-diameter (54 inches) parabolic reflector, provides a highly directional beam for the downlink radio signal. The antenna can be rotated on two axes so that it can always be pointed at Earth except when obscured by the spacecraft. The low-gain antenna provided essentially uniform coverage in the direction of Earth.

An X-band transmitter, operating at 8415 megaHertz, will be flown on Mariner 10 as an experimental unit. The 200-milliwatt transmitter will not send modulated telemetry, but will be used for Doppler and ranging data when the ground receiving station is the 64-meter (210-foot) antenna at Goldstone, Calif. The X-band transmitter, used with the high-gain antenna only, is supplied with an RF drive signal by the S-band radio subsystem.

Commanding the Spacecraft

All communications between Mariner and Earth will be in digital form. Command signals transmitted to the spacecraft will be decoded--translated from a binary form into electrical impulses--in the flight command unit and routed to their proper destination.

Ground commands to the spacecraft fall into two categories: direct commands (DC) and coded commands (CC).

A direct command causes a single action on the spacecraft. For example, DC-42 switches the spacecraft transmitter into high power operation. There are 86 possible direct commands which may be routed to various spacecraft subsystems via the flight command unit (FCU) of the modulation/demodulation subsystem. Direct commands back up all critical automatic spacecraft functions, choose redundant elements, initiate maneuvers and perform other functions.

Coded commands radioed to the spacecraft have the following functions: CC-1 and CC-2 are transmitted as a back-to-back pair and contain coded data to program the memory of the central computer and sequencer (CC&S); CC-3 commands the CC&S to readout to the ground specific words in its memory; CC-4 loads trajectory correction maneuver data into the sequencer portion of the CC&S; CC-5 is directed to the flight data subsystem (FDS) and allows ground control of the science payload, for example, changing camera filters or exposure times and other science instrument options; CC-6 is routed to the articulation and pointing subsystem (APS) and controls the step motion of the scan platform, high-gain antenna and solar panel tilt. Like direct commands, coded commands back up critical functions which, in a standard mission, are initiated automatically by on-board logic.

Downlink Telemetry

Data telemetered from Mariner will consist of engineering and science measurements prepared for transmission by the flight data subsystem, telemetry modulation unit and data storage subsystem. The encoded information will indicate voltages, pressures, temperatures, television pictures and other values measured by the spacecraft telemetry sensors and science instruments.

Engineering data may be transmitted at rates of 2450 bits per second, 33 1/3 bps or 8 1/3 bps. The 2450-bps rate is normally used only for critical exercises such as trajectory correction maneuvers. The data storage subsystem can record data at that rate during a maneuver.

Non-television science data can be transmitted at 2450 bps and 490 bps. The 2450-bps rate is the primary format for cruise science telemetry. The lesser rate results in reduced sampling of the instruments and is used only when the telecommunications link cannot support the higher rate.

The flight data subsystem will format television pictures for transmission at a rate of 117.6 kilobits per second and at 22.05 kbps. The high rate represents real-time, full resolution TV frames, each of which is completed in 42 seconds. The 117.6-kbps rate will be used at Venus and again at Mercury if the telecommunications link permits. The 22.05-kbps rate provides edited TV data in two modes: the first is a low resolution sampling of the entire TV frame; the second is a high resolution picture corresponding to a 1/4 strip of a high rate frame.

The data storage subsystem records TV pictures at 117.6 kbps and non-TV science data or engineering data at 2450 kbps. The tape transport is belt-driven. Its 1/2-inch tape is approximately 550 feet long and is divided into eight tracks. Alternate bits of data are recorded on adjacent tracks. Four end-to-end passes of the tape are required to fill the recorder. Total storage capacity is 180 million bits. Two playback speeds are provided--22.05 kbps and 7.35 kbps. Thirty-six TV pictures can be recorded in 25 minutes; playback will require 2 1/4 hours at the high rate and 6 3/4 hours at 7.35 kbps.

Tracking the Spacecraft

To provide the standard Doppler tracking data, the radio signal transmitted from Earth is received at the spacecraft, changed in frequency by a known ratio and re-transmitted to Earth. It is possible to precisely determine the transmitted downlink frequency, while precisely measuring the Doppler-shifted received signal, thereby measuring spacecraft velocity. This is called two-way tracking. One-way tracking is when no uplink signal is transmitted and the downlink carrier frequency is determined by an onboard oscillator.

Distance or range to the spacecraft is measured in two-way configuration by transmitting a digital code on the uplink signal, turning this code around in the spacecraft and transmitting it back to the ground. By measuring the total elapsed time between transmitting and receiving the code at the ground station, and knowing accurately such factors as the speed of light, turnaround delay and relative velocities of the spacecraft and tracking station, it is possible to determine the spacecraft range. Ranging is carried out continuously during the cruise phases of the mission, using both the S-band and X-band transmitters. The X-band signal can be received only at the 64-meter (210-foot) antenna station at Goldstone , Calif.

Central Computer and Sequencer

Heart of the onboard control system is the central computer and sequencer (CC&S) which provides a semi-automatic capability in the spacecraft.

Since Mariner 10 will investigate two planets - using the gravity of Venus to reach Mercury, augmented by four trajectory correction maneuvers, a ground command capability is essential throughout the mission. However, after each leg of the mission has been completed, a new updated sequence can be programmed into the CC&S memory so that the next phase may be conducted automatically in the event of loss of the uplink signal.

The CC&S consists of a special purpose programmable computer, which contains a 512-word memory, and a fixed sequencer for redundancy during maneuvers.

The CC&S functions by counting hours, minutes or seconds, under control of an accurate onboard clock, until some pre-programmed interval has elapsed and then branching into subroutines stored in the memory which result in commands to other spacecraft subsystems.

Normally, the programmable computer portion and the fixed sequencer portion of the CC&S operate in tandem for the trajectory correction maneuvers. If there is any disagreement on any maneuver event, the maneuver is aborted and the spacecraft returns to the cruise condition. A maneuver also can be performed by either portion of the CC&S alone.

Attitude Control

Stabilization of the spacecraft is provided by a system of 12 cold gas jets mounted at the ends of the two solar panels and on outriggers supporting the high-gain antenna and magnetometer booms. The jets are linked by logic circuitry to three gyroscopes--one gyro for each of the spacecraft's three axes--to the Canopus sensor and sun sensors.

The gas system is divided into two sets of six jets, each set complete with its own gas supply, regulators, lines and valves so that a leak or valve failure will not deplete the gas and jeopardize the mission. Each system is fed by a titanium bottle containing pressurized nitrogen gas. Normally, both sets will operate during the mission. Either system can support the entire flight in the event of a failure in the other.

The sun sensors are light-sensitive diodes which inform the attitude control system when they see the sun. The attitude control system responds to these signals by turning the spacecraft and pointing the solar panels toward the sun for stabilization on two axes and for conversion of solar energy to spacecraft power. Nitrogen gas escapes through the appropriate jet nozzle, imparting a reaction to the spacecraft to correct its angular position.

The star Canopus, one of the brightest in the galaxy, will provide a second celestial reference upon which to base maneuvers, point the high gain antenna toward Earth and the instruments toward their target. The Canopus sensor will activate the gas jets to roll the spacecraft about the already-fixed longitudinal or roll axis until it is locked in cruise position. Canopus acquisition occurs when the light intensity in the field of view of the sensor matches the intensity anticipated for the star Canopus. Brightness of the sensor's target star will be telemetered to the ground to verify the correct star has been acquired.

Several brightness ranges may be selected when performing roll acquisition, allowing stars other than Canopus to be acquired. The star Vega is used as the roll reference during the first few days of flight to improve Earth-Moon viewing.

Upon receipt of commands from the central computer and sequencer (CC&S), the attitude control system orients the spacecraft to align the thrust axis of the rocket engine in the direction required for the trajectory correction maneuver.

During firing of the engine, the spacecraft will be stabilized by positioning the angles of four jet vanes located in the downstream end of the rocket motor nozzle so that thrust direction remains through Mariner's center of gravity.

Propulsion

The Mariner 10 trajectory is planned around four maneuvers with a rocket engine. Each must be exceptionally accurate in order to reach the desired target zone at Mercury.

The first trajectory correction maneuver (TCM-1), planned for launch plus 10 days, removes launch injection errors. TCM-2, about two weeks before arrival at Venus, ensures achievement of the precise aiming point at Venus to use that planet's gravitational field for bending the trajectory toward Mercury. TCM-3 occurs four days beyond Venus and corrects presently unknown effects observed during the Venus swingby. The final trim to the trajectory will be provided by TCM-4 four weeks before Mercury encounter.

Mariner's rocket engine is a monopropellant blowdown system capable of a minimum of five starts and shutdowns with a total velocity increment of about 120 meters per second (268 miles per hour).

Firing of the engine is controlled by the central computer and sequencer (CC&S) which receives the time, direction and duration of required thrust via the ground-to-spacecraft communication link. At the command signal from the CC&S, a solenoid-actuated valve allows the hydrazine propellant to enter the thrust chamber from a pressurized tank. Spacecraft attitude is maintained by auto-pilot controlled gimballing of jet vanes in the engine exhaust.

Power

The Mariner power subsystem supplies electrical power to the spacecraft, switches and controls the power and provides an accurate timing source for the spacecraft.

Primary power source is an array of photovoltaic solar cells mounted on two panels. Covering 5.1 square meters (54.9 square feet), the cells will collect solar energy and convert it into electrical power. Primary raw power of about 475 watts at Mercury will be provided by the panels.

The panels will be rotatable up to 76 degrees off the Sun to maintain their temperature at about 100°C (212°F).

A rechargeable nickel-cadmium battery provides spacecraft power during launch and when ever the panels are turned away from the Sun. The battery will be kept in a state of full charge and will be available as an emergency power backup source.

Two power regulators will provide redundancy. In the event of a failure in one, it will be removed automatically from the line and the second will be switched in to assume the full load.

Primary form of power distributed to other spacecraft systems is 2400-Herts square wave. The gyro spin motors use 400-Hertz three-phase current. The S-band traveling wave amplifier tubes, the X-band transmitter, the battery charger and some temperature control heaters use unregulated dc power.

A crystal oscillator in the main power inverter controls the frequency to within 0.01 per cent, assuring other spacecraft systems of a reliable, accurate frequency on their power line. A backup crystal oscillator is located in the standby inverter. The spacecraft central computer and sequencer uses the oscillator frequency as a timing source.

Telemetry measurements have been selected to provide the necessary information for the management of spacecraft power loads by ground command, if necessary.

Temperature Control

Mariner 10 will fly closer to the Sun than any previous man-made object. Survival depends greatly upon keeping temperatures within operating limits while the spacecraft traverses an environmental range of one solar constant at the Earth distance to nearly five times that solar intensity at the orbit of Mercury.

Heating by direct sinlight on the Mariner spacecraft is minimized by a thermal blanket on the Sun side and a deployable Sun shade that extends beyond the perimeter of the octagonal base. The shaded side of the octagon is enclosed in another multi-layered blanket to prevent the rapid loss of heat to the cold of space. Also blanketed are the television cameras and ultraviolet spectrometer mounted on the scan platform.

Temperature control of five of the eight electronics compartments is provided by thermostatically controlled louver assemblies which provide an internal operating range near room temperature.

The solar panels, which fully face the Sun after launch, will be rotated five times during the mission until they are canted more than 70 degrees from the Sun line. Temperature on the surface of the panels will be maintained at about 100°C (212°F).

Electric heaters are located in some of the electronics compartments to provide additional heat during certain portions of the mission.

Paint patterns and polished metal surfaces are used on the Mariner for passive control of temperatures outside of the protected octagon and blanketed areas. For example, the concave face of the high-gain antenna dish is painted with a flat white, non-reflecting paint to absorb sunlight. The reverse side is painted black to absorb heat.

Scan Platform

Mariner's two television cameras and the ultraviolet air-glow spectrometer are mounted on a scan platform which can be rotated about two axes for pointing at Venus and Mercury during the planet encounter phases of the mission. The platform is located atop the octagonal base of the spacecraft on the side opposite the Sun.

The platform, controlled by the articulation and pointing subsystem (APS), allows multiple pointing directions of the instruments. The platform's two axes of rotation are described as the clock angle motion about the axis of its connecting column extending vertically from the octagon and cone angle motion about an axis which is horizontal. The platform is motor-driven and moves 255 degrees in clock and 122 degrees in cone.

PLANETARY CHARACTERISTICS

	Earth	Venus	Mercury
Diameter	7927 miles 12,756 kilometers	7700 miles 12,392 km	3030 miles 4876 km
Mass (Earth=1)	1	0.82	0.06
Volume (Earth=1)	1	0.86	0.06
Density (Water=1)	5.52	5.27	5.50
Distance from Sun	92,900,000 miles 149,503,970 km 1.0 Astronomical Unit (AU)	67,200,000 miles 108,144,960 km 0.7 AU	35,960,000 miles 57,870,428 km 0.4 AU
Length of Year	365.25 days	225 Earth days	88 Earth days
Rotation Rate	23 hours, 56 minutes	243 Earth days	58.6 Earth days
Revolution Speed	66,000 mph 106,214 km/h	79,000 mph 127,135 km/h	107,900 mph 173,643 km/h

VENUS

Cloud-shrouded Venus has been a source of fascination to astronomers since Galileo first turned his newly-invented telescope on the planet in 1610.

Because Venus is similar to the Earth in size and mass, and was probably formed out of the same homogeneous mixture of gas and dust, it has often been called the Earth's sister planet.

But recent American and Soviet space probes have revealed atmospheric and surface conditions that differ markedly. The surface of Venus may be sizzling hot at 800°F., the atmosphere about 100 times heavier than that of Earth, and largely made up of carbon dioxide.

Scientifically, Venus is the most puzzling planet in the solar system.

Radar measurements by JPL in 1962 showed that Venus has a slow retrograde rotation opposite the rotational direction of the Earth. The planet's rotational period is 243 days and it revolves around the Sun each 225 days. A Venus day is 115 Earth days although the dense atmosphere diffuses and subdues the Sun's light leaving little difference between night and day.

More recent observations of Venus have shown large, shallow craters, revealed by radar; fast moving clouds within the permanent cloud cover, seen in ultraviolet light, and a pulsation of the top of the cloud cover, measured in the infrared.

The very recent findings of a vertical, one kilometer movement of the top of the cloud layer appears to operate on a four-day cycle and may be a fundamental feature of atmospheric dynamics not explained by current theories of atmosphere circulation on Venus.

Investigators are hopeful that the first television pictures of Venus' cloud cover in the ultraviolet may begin to shed some light on the baffling dynamics of the planet's upper atmosphere.

MERCURY

The difficulty in observing Mercury from the Earth, because of its small size and the closeness of the Sun, is reflected in determinations of its rotational speed. This was once thought to be equal to Earth and was calculated at 24 hours and 50 seconds.

In 1891 Schiaparelli announced that Mercury rotated only once during its period of revolution around the Sun and therefore it always turned the same face towards the Sun. This was accepted until 1965 when radar measurements from Cornell University's Arecibo radio telescope found the rotational rate to be 58.6 days. This rate and the planet's motion around the Sun yields a Merucry day equal to 180 days on Earth. Mercury has an eccentric orbit, coming as close as 28,750,000 miles from the Sun and retreating to 43,750,000 miles. This orbit has also contributed to the difficulties of observing Mercury as we view it at extreme ranges. At its closest approach to Earth it is silhouetted against the Sun.

Faint markings have been observed, and photographed, on the surface of Mercury. They are greyish in color with some lighter markings verging on white. The background is yellowish. The pattern and distribution of the markings seems to remain constant and are thought to be permanent.

Observations of an irregular shadow line at the terminator indicate changes in elevation on the surface. If the surface of Mercury were smooth, the shadow line would be even. The fact that Mercury reflects about the same amount of sunlight as the Moon, only 7 percent, suggests that both bodies are similar.

Temperatures on Mercury are estimated to range from 650°F, on the day side, to -300°F at night. The dayside temperatures would melt lead.

Although it would not be possible for Mercury to retain any appreciable atmosphere, because of its low gravity and closeness to the Sun's radiation, some observers have seen a whitish veil at times. This could be fine dust particles suspended in a very thin atmosphere.

Mercury's diameter is 4876 km (3,030 miles) and has a density of 5.5 times that of water, the same as Earth's. It is a heavy planet for its size, probably the result of being formed near the center of the primitive cloud of hot gases that became our solar system; or it may be that Mercury's proximity to the Sun may have stripped away the upper, lighter surface of the planet.

-more-

SCIENCE

So little is known of Mercury that the expected wealth of data from the mission will, in effect be a first look at the planet. It is so difficult to observe from Earth that its true rotational speed was not known until recent radar observations in 1965.

The science objectives for the mission will comprise a thorough exploration of Mercury with seven experiments. The experiments are: television, infrared radiometer, extreme ultraviolet, radio science (occultation and celestial mechanics), magnetometer, plasma science and charged particle telescope.

The same experiments, with the exception of the ultraviolet occultation spectrometer, will also explore Venus, adding to knowledge gained from previous U.S. and Russian flights. The ultraviolet occultation experiment requires Sun occultation, which will not occur on the trajectory at Venus.

Exploration of Venus is determined by the trajectory requirements for reaching Mercury using gravity-assist.

To obtain the best science results possible, the requirements of each experiment were compiled and the space near Mercury was evaluated for aiming points and trajectories that would satisfy these requirements.

The requirements specified a flight path past Mercury that would provide occultation of the Earth and Sun; that is, placing Mercury between the spacecraft and the Sun and between the spacecraft and Earth at certain points on the trajectory.

Sun occultation will allow the ultraviolet spectrometer to see the edge of the disc of Mercury, or limb, and observe ultraviolet radiation from the Sun passing through the atmosphere, if any. Measurements are made on entrance into occultation and at exit.

A second part of the ultraviolet experiment is the airglow spectrometer, which will scan the entire disc of Mercury to detect various gases in any atmosphere that might be present. Ranging from the lightest to the heaviest, the gases are hydrogen, helium, argon, oxygen, neon and carbon components. In any atmosphere, the lightest gases would be found at high altitudes and the heaviest near the surface.

The viewing aperture of the airglow instrument is a vertical slit. As the spacecraft approaches Mercury the instrument will see the entire vertical structure of the atmosphere and will search for hydrogen. As the distance between the spacecraft and planet decreases, the heavier gases will be searched for, in succession, as the instrument view works downward through the atmosphere

Near Earth, the airglow instrument will measure the hydrogen corona and search for helium and measure the reflective properties of the Moon at extreme ultraviolet wavelengths.

Photography of the Earth and Moon will be performed at the same time.

Earth occultation will allow radio signals enroute to Earth from the spacecraft to pass through any atmosphere at Mercury. Bending and scattering of the radio signal by gas molecules in the atmosphere can be interpreted from the received signal to provide density and pressure measurements and an estimate of gases present. The presence of an ionosphere can be detected. The radius of the planet is also derived by this experiment.

In order to achieve these occultations, and the resultant science data, the spacecraft will pass Mercury on its dark side, approaching at late afternoon on Mercury. The infrared radiometer, which measures temperatures on the surface, will be scanning the planet from late afternoon, during approach, through to early morning.

Because of the nightside pass, photography will begin on the approach to Mercury, will be halted during the nightside pass and resume when Mariner passes Mercury. Because the cameras cannot be operated on the dark side of Mercury, the camera system has been changed from previous Mariner designs. Both cameras, not just one as on other flights, will function with telescopes to provide high resolution photographs. However, the trajectory will allow, photography at the terminator, the junction of dayside and nightside, where contrast in the photographs will be higher because of the low light angles.

The pass on the nightside will also allow the charged particle and the plasma experiments to pass through an expected plasma cavity. This group of experiments require a pass as close to the surface of Mercury as is feasible, since the magnetic field and solar wind effects are expected to be small and closeness will improve detection. Measurements of the interaction of Mercury with the solar wind by these instruments will give us our first spacecraft data on the magnetic and radiation environment of the planet. Such data is strongly interrelated and is vital to any understanding of a planet's origin and history, and in this particular case, the role of the Sun in the formation and subsequent history of its closest planet.

It is believed that Mercury is an unusually dense planet, perhaps with a higher proportion of iron than found in other planets. This idea is supported by observations of Mercury's gravitational effects on Venus and comets.

One theory states that a violent convulsion of the Sun once burned away the upper and lighter layers of the planet. Or it may be that when the Sun and the planets were formed from a hot, condensing cloud of gases, the material closest to the center of that mass were heavier elements and these formed Mercury.

Analysis of the flight path of the spacecraft will give the celestial mechanics experiment a highly accurate figure on the mass of the planet, and may corroborate or refute the data obtained from Earth observation. This experiment also requires a close pass by Mercury.

Earth occultation at Venus, which will yield atmospheric density and radius measurements, requires the capability of moving the high gain antenna which will be transmitting the spacecraft radio signal back to Earth.

The Venus atmosphere is so thick that radio signals can be bent and actually curved around the planet, cutting off communication with Earth even before the signals would be extinguished by the surface. A moveable spacecraft antenna compensates for the bending of the signal's path and will allow probing of the atmosphere down near the surface.

The ultraviolet airglow experiment will be particularly interesting at Venus because observations from Earth in the ultraviolet have revealed markings in the clouds that rotate at a faster rate than the planet.

This phenomenon will be studied through several rotations of the planet.

To allow broader photographic coverage of the Venus clouds than the two high resolution cameras would permit, a secondary system using a wide angle lens, fiber optics, a mirror position on the filter wheel (to bypass the telescopic lens) and the two vidicon cameras will be used.

Extreme Ultraviolet

This experiment consists of two independent instruments, a fixed-pointing occultation spectrometer, mounted on the spacecraft body, and an airglow instrument, mounted on a scan platform. The experiment will analyze planetary atmospheres.

At Mercury, the occultation spectrometer will search for an atmosphere above the edge (limb), of the planet's disc. The airglow instrument will scan the entire disc to detect radiation from and measure altitude distribution of hydrogen, helium, argon, oxygen, neon and carbon components, if these elements are present.

During cruise the two instruments will measure distribution of Hydrogen Lyman-alpha emanating from the galactic and Magellanic cloud sources.

Close to Earth, the airglow instrument will observe the Hydrogen Corona of Earth, search for Helium and measure the reflective properties of the Moon at extreme ultraviolet wavelength.

At Venus, the instruments will measure distribution of carbon, oxygen and hydrogen lyman-alpha and will search for helium, neon and argon.

Infrared Radiometer

This experiment will measure temperatures on the surface of Mercury and Venus by sampling thermal or infrared radiation.

The trajectory of the spacecraft past Mercury will provide measurements from late afternoon through the night side and into the early morning hours.

Temperature variations are expected to be large. A thin or non-existent atmosphere will allow intensive heating of the day side. The slow 58.6 day rotation, without a heavy atmosphere to retain heat, will allow the night side to quickly radiate heat from the surface.

Absorption and loss rates can provide indirect evidence of the nature of the surface material, i.e. sand, gravel, rock.

Unexpected temperature variations may be correlated with photographs of the area or measurements by other instruments. For example, mountains or valleys could give a temperature variation and might be visible in photographs or be reflected in atmospheric pressure measurements. Hot spots could also be correlated with volcanoes or a difference in surface materials.

OCCULTATION UV SPECTROMETER

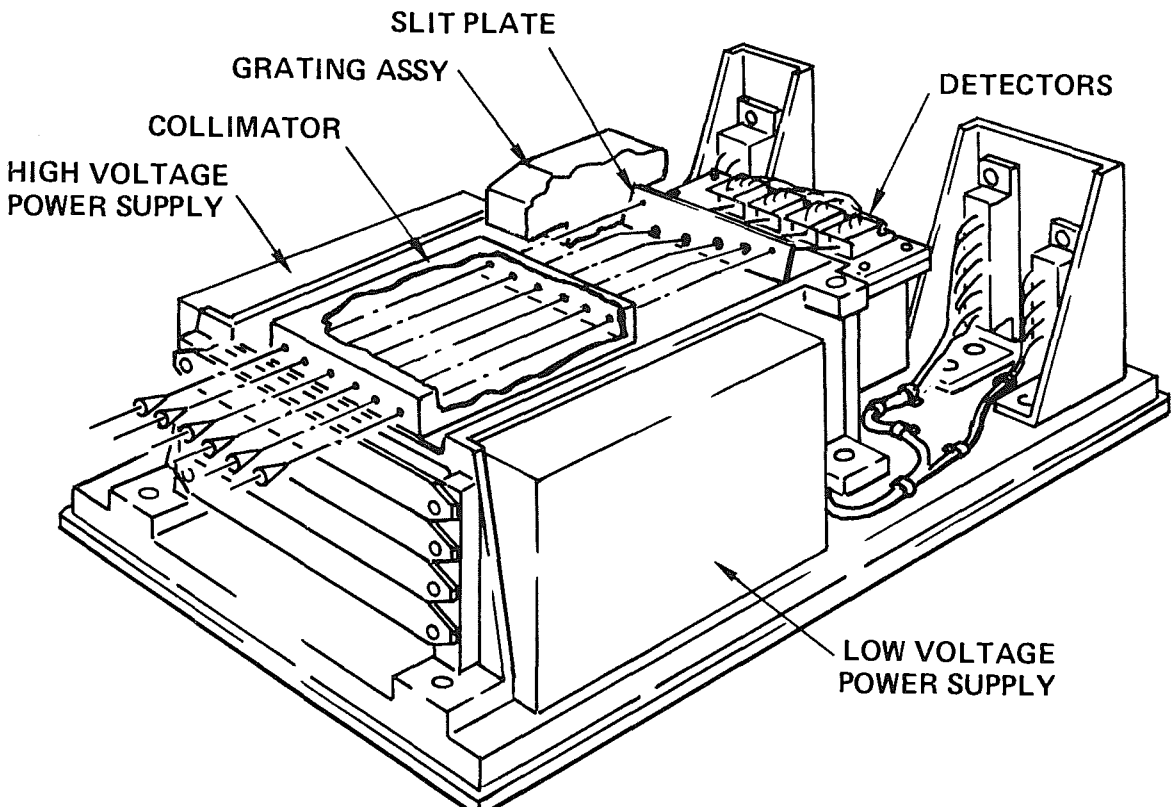

AIRGLOW UV SPECTROMETER
(Without Cover)

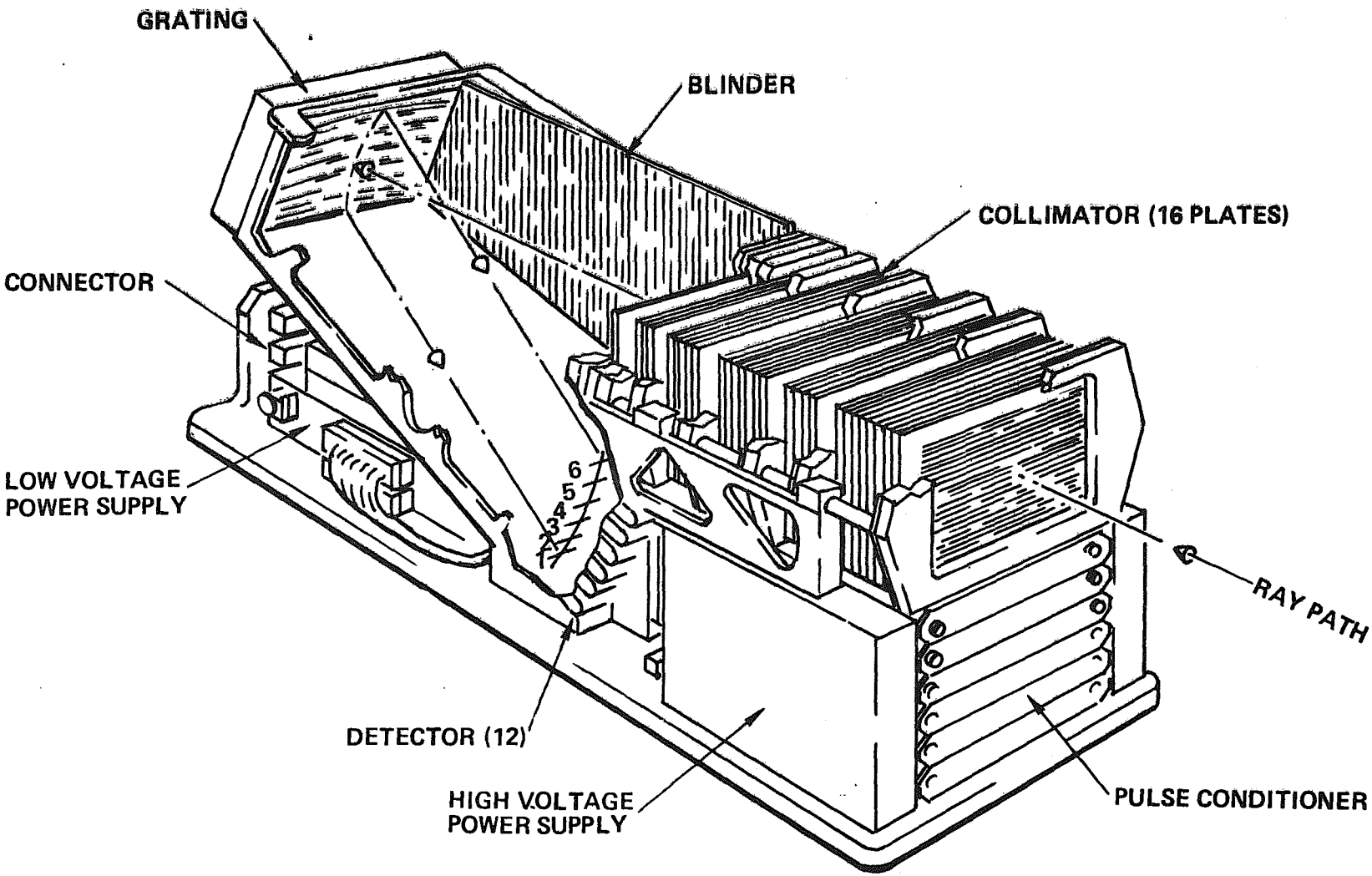

INFRARED RADIOMETER

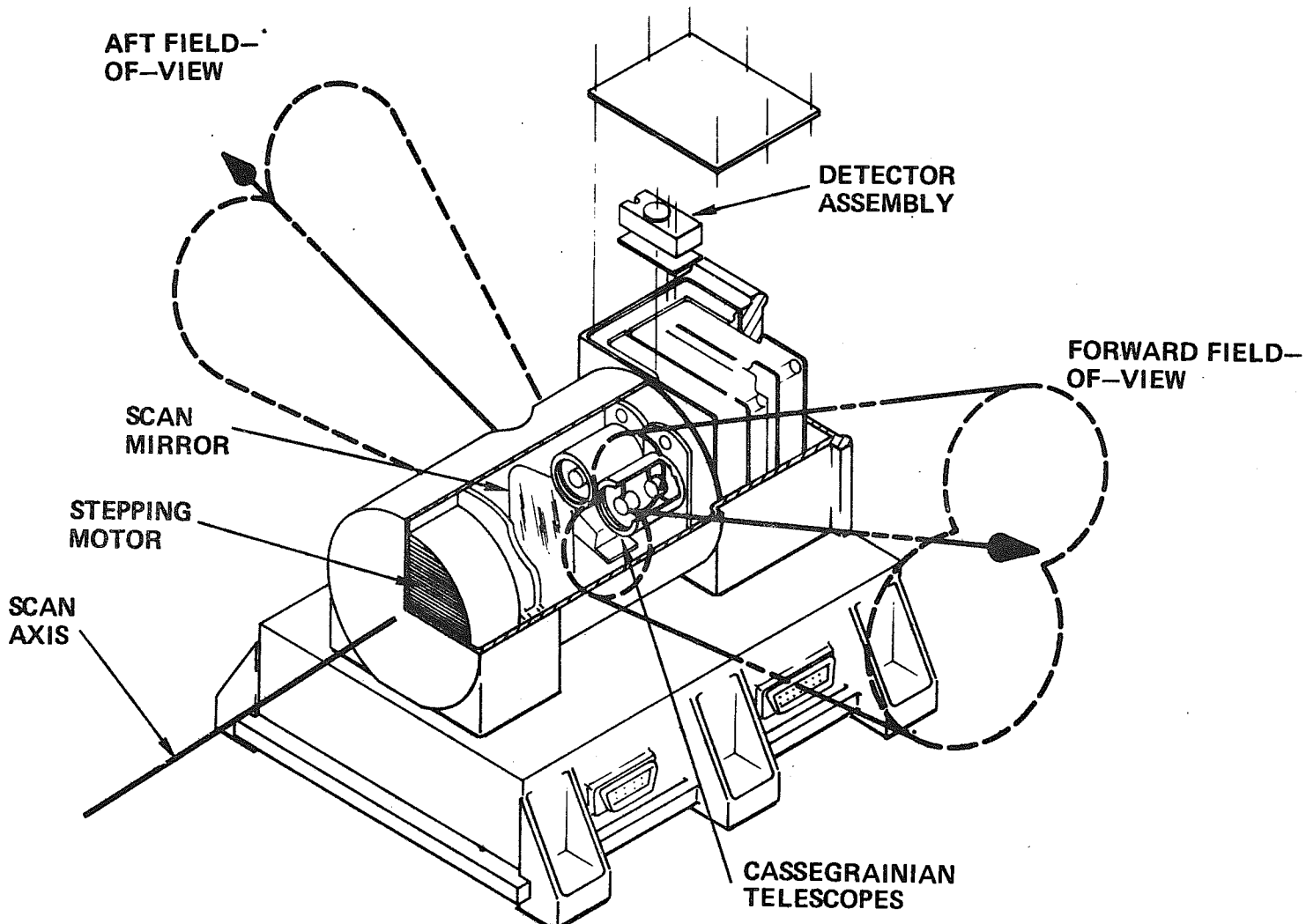

At Venus, measurements of cloud top temperatures and at the edge of the planet's disc will be made at higher resolution than by prior spacecraft.

Radio Science

This experiment will provide data for celestial mechanics and occultation measurements from radio tracking of the spacecraft and analysis of planetary atmospheric effects on the radio signal.

The celestial mechanics experiment will determine the mass and gravitational characteristics of both Mercury and Venus from the effect of the planets on spacecraft trajectory. The data will also yield estimates of the planets' internal composition and density.

In the occultation experiment, radio waves from the spacecraft's transmitter will pass through the atmosphere of Venus or Mercury, enroute to Earth receivers, as Mariner passes behind the planets as seen from Earth.

Trajectories to both planets will provide Earth occultation.

Gases in an atmosphere diffract and diffuse the signal, and analysis of the received signal yields pressure and temperature measurements from the top of the atmosphere down to the surface. These measurements can be fitted to a model of the gases present in the atmosphere. Analysis will also reveal if the planet has an ionosphere similar to Earth.

The cut-off of the signal as it grazes the surface provides a measurement of the radius of the planet.

As the thick atmosphere of Venus can bend the signal and trap it in a path around the planet, the antenna can be steered to offset the bending allowing deeper pentration of the atmosphere.

Data will be provided by the spacecraft's standard S-band transmitter and an experimental X-band system.

Plasma Science

The Plasma Science Experiment will provide the first observations of the solar wind, a stream of energetic particles emanating from the Sun, inside the orbit of Venus.

The experiment will be activated shortly after launch and will provide continuous measurements from the orbit of Earth to the orbit of Mercury, from 1 to 0.4 Astronaumical Units.

Objectives of the experiments are: To determine the mode of interaction between the planet Mercury and the solar wind, and to make a comprehensive study of the plasma regime at Mercury; to verify and extend previous observations of the solar wind interaction with Venus and to clarify the role of the electrons in the interactions; and to investigate the characteristics of the solar plasma between 1 and 0.4 AU.

Instrumentation for the experiment consists of two detectors on a motor-driven mounting (scan platform). The principal detector, facing sunward, is composed of a pair of electrostatic analyzers. The auxiliary detector is a single electrostatic analyzer facing away from the Sun.

The forward-looking system is called the Scanning Electrostatic Analyzer (SEA) and the backward-looking system is the Scanning Electron Spectrometer (SES).

The SEA will measure positive ions and electrons, the SES will measure electrons.

Television

Two vidicon cameras equipped with eight filters each and capable of taking both narrow and wide angle photographs are expected to retun 8000 photographs. These will include the Earth, Earth and Moon, Venus and Mercury.

They are mounted on a scan platform allowing movement in vertical and horizontal directions for precise targeting.

Catadioptric Cassegrain telescopes are attached to the vidicon cameras for narrow angle photography. An auxiliary optical system mounted on each camera provides wide angle photography. Changing to wide angle photography is permitted by moving a mirror on a filter wheel to a position in the optical path of the auxiliary system.

Exposure times range from 3 milliseconds to 12 seconds. Each camera will take a picture every 42 seconds. Each television picture consists of 700 scan lines. There are 832 picture elements per line. Picture elements are digitally coded into 8 bit words for transmission.

The narrow angle system has a focal length of 1500 mm, and $1/2^{\circ}$ field of view; the wide angle, 62 mm, $11\text{-}14^{\circ}$ field of view.

There are seven filter positions: wide angle image relay mirror, blue band pass, ultraviolet polarizing, minus ultraviolet high pass, clear, ultraviolet band pass, defocussing lens (for calibration), and yellow band pass.

SCANNING ELECTROSTATIC ANALYZER

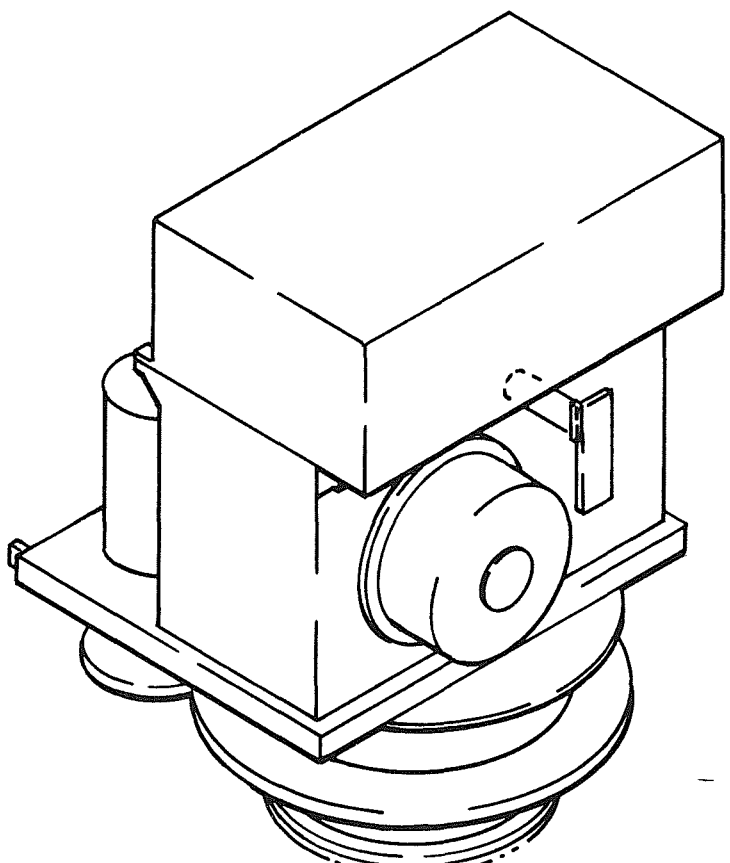

TELEVISION CAMERA

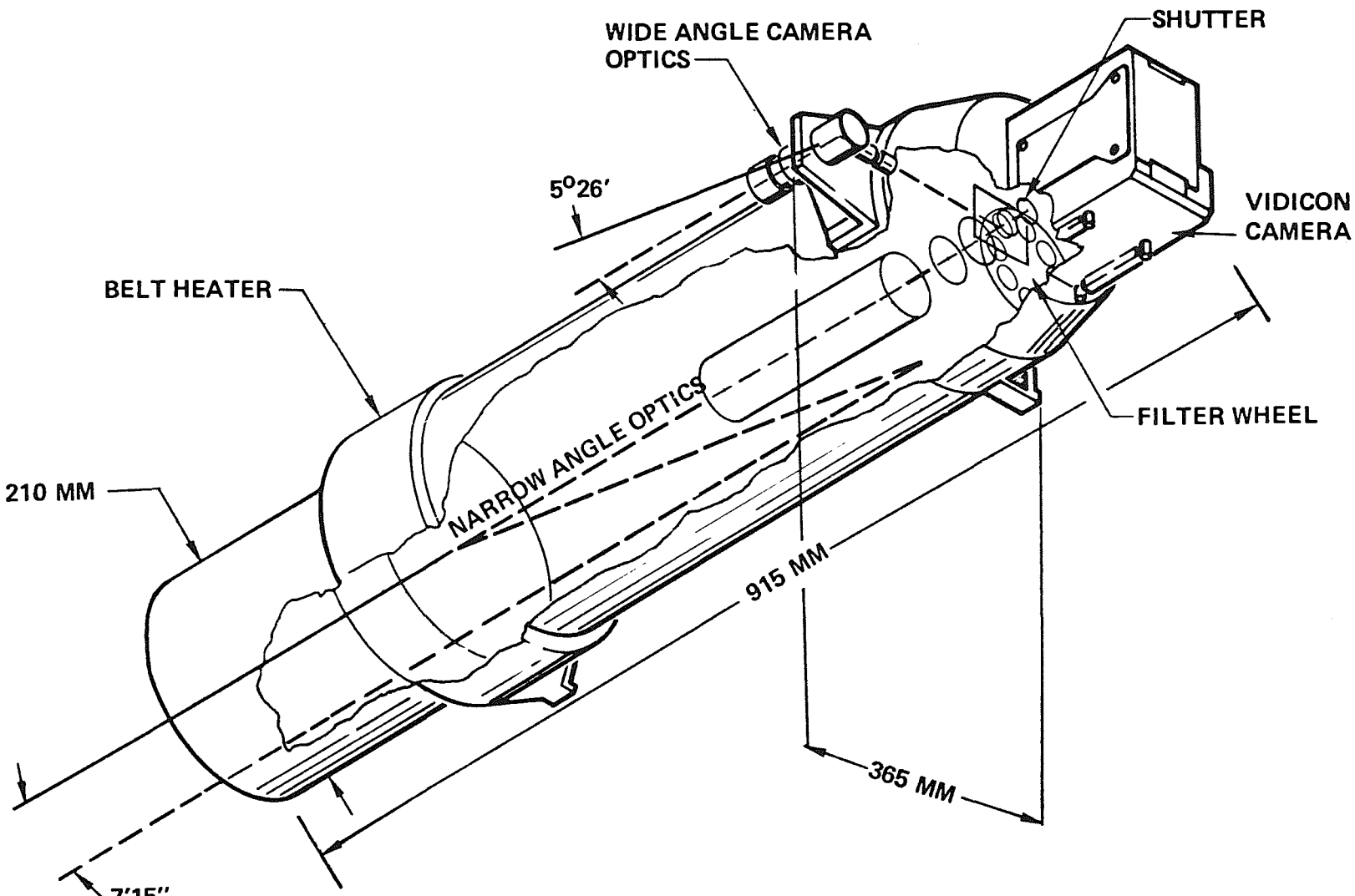

Charged Particle Experiment

The instrument for this experiment has two parts, the Main Telescope and the Low Energy Telescope, mounted on the body of the spacecraft.

The experiment will measure charged particles near Mercury originating on the Sun and in interplanetary space. Solar flares will be studied and correlated with measurements from Pioneers 9 and 10.

During cruise portions of the mission the experiment will measure solar and galactic cosmic rays. The separation of solar and galactic rays and the effect of the Sun on galactic rays is an important objective.

At Mercury, the possible existence of a magnetic tail and bow shock wave will be sought.

Magnetometer

This experiment will detect interactions of the solar wind with Venus and Mercury to yield a picture of the magnetic environment at each planet.

At Venus, evidence of a trailing magnetic field and a planetary field will be sought. Based on prior measurements, any planetary field will be weak.

Since both Mercury and Venus rotate slowly, it is not expected that an iron core, if present, could create a dynamo effect as it does on our own planet.

During the cruise portion of the mission, the experiment will measure interplanetary fields. Measurements between the orbits of Venus and Mercury will be conducted for the first time.

The experiments employs two fluxgate magnetometer sensors, both mounted on a six-foot boom. One is mounted close to the spacecraft to measure magnetic disturbance from the spacecraft. This data will be used to interpret measurements by the other sensor which is located outboard on the boom to minimize magnetic effects of the spacecraft.

CHARGED PARTICLE TELESCOPE

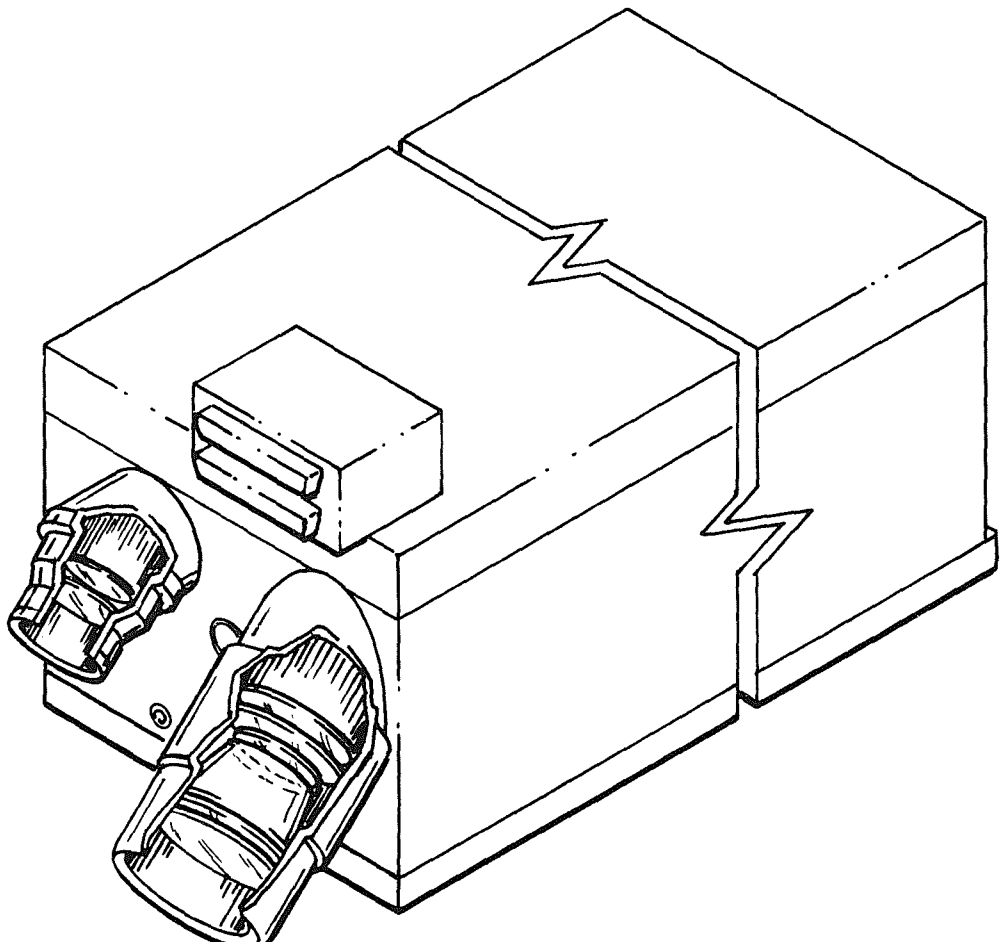

TRIAXIAL FLUXGATE MAGNETOMETER

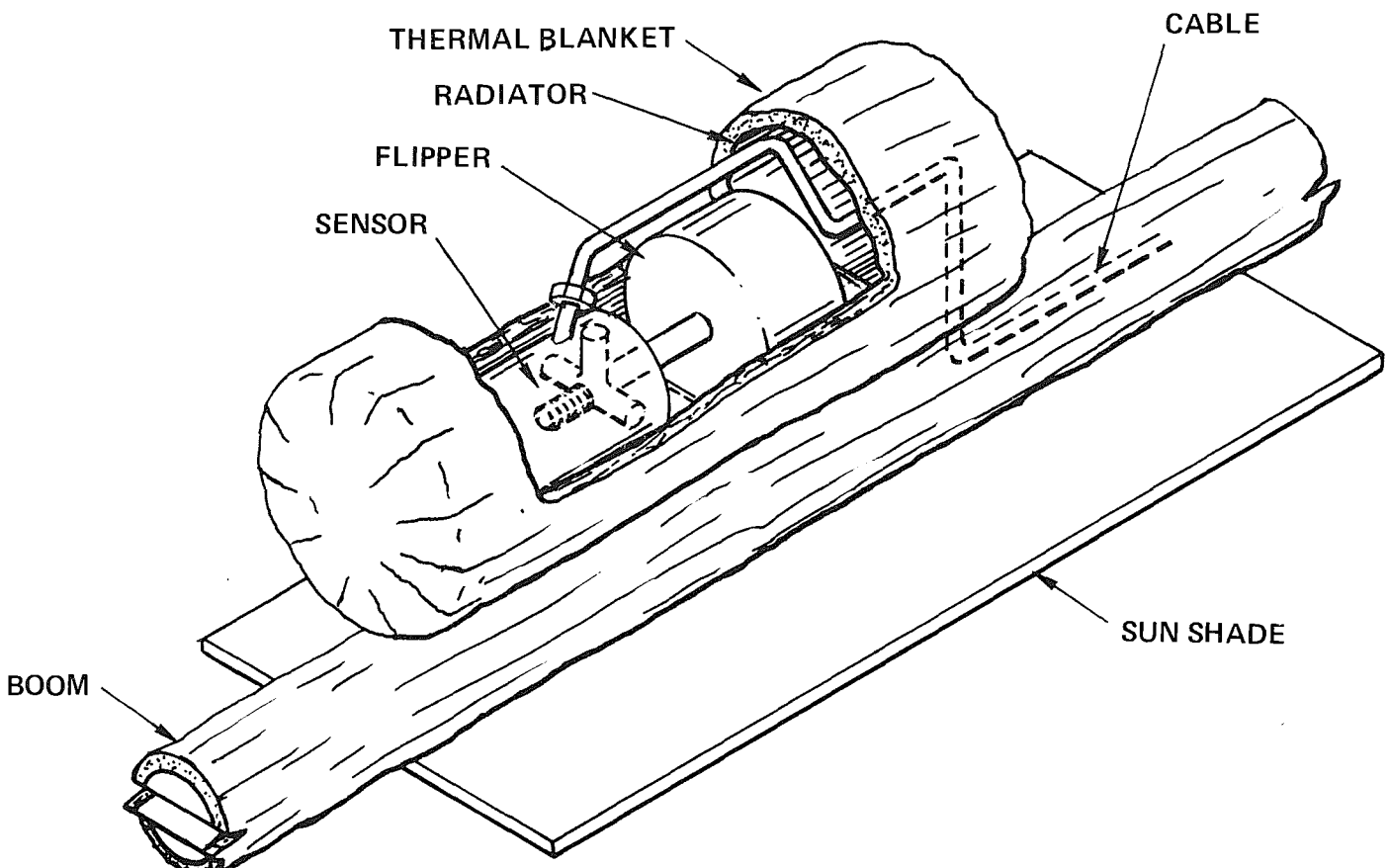

TRACKING AND DATA SYSTEM

The Tracking and Data System (TDS) will provide elements of the Deep Space Network (DSN), Air Force Eastern Test Range (AFETR) and the Spaceflight Tracking and Data Network (STDN) for support of the Mariner Project.

DSN stations assigned to Mariner are at Goldstone, Calif; Madrid, Spain; and Canberra, Australia. Each location is equipped with both a 64-meter-diameter (210 feet) antenna and a 26-meter-diameter (85 feet) antenna. A 1.2-meter (four feet) antenna at Kennedy Space Center covers the pre-launch and launch phases of the flight.

For all of NASA's unmanned missions in deep space, the network provides tracking information on course and direction of the flight, velocity and range from Earth. It also receives engineering and science telemetry, including planetary television coverage, and sends commands for spacecraft operations.

All communications links are in the S-band (2100-2300 megaHertz). Mariner 10, however, will carry a experimental X-band (8400 megaHertz) transmitter. The X-band transmitter, operating with Mariner's S-band system, will provide dual frequency ranging and Doppler data while the 64-meter station at Goldstone is tracking the spacecraft, and will contribute to the radio science experiment at Venus and Mercury. (Only the Goldstone station is equipped to receive the X-band signal).

The DSN is tied to the Mission Control and Computing Center (MCCC) at JPL by DSN Ground Communications and NASA's Communications Network (NASCOM). Low-rate data from the spacecraft are transmitted over high speed circuits operating at 4800 bits per second. High rate data are carried on wideband lines which operate at 28.5 kbps.

A new 230-kbps supergroup circuit between the 64-meter antenna station at Goldstone and the MCCC at JPL permits 117.6-kbps video data to be received in real time (one TV picture every 42 seconds). At the overseas stations, the real-time video data will be received by a 64-meter antenna, recorded on tape and relayed to Pasadena at 22.05 kbps (one TV picture every 3 minutes, 44 seconds).

All telemetry received at the stations will be routed immediately to JPL, distributed there to computers and other specialized processing machinery, making it ready for display to science experimenters and engineers conducting the flight operations. At the same time, spacecraft range and range-rate information will be relayed from the receiving stations.

Scientists and engineers in the MCCC will have push-button control of the displayed information on television screens, automatic plotters and printers. The processed information will be stored in the computer system, available upon command.

Commands to the spacecraft are generated in the MCCC and are automatically loaded into a command processing computer at one of the DSN stations.

During the launch phase of the mission, data acquisition will be accomplished by the Tracking and Data System through the use of near-Earth facilities. These are stations of the Air Force Eastern Test Range (AFETR) and downrange elements of the NASA Spaceflight Tracking and Data Network (STDN) together with STDN instrumented jet aircraft.

All of NASA's networks are under the direction of the Office of Tracking and Data Acquisition. JPL manages the DSN. The STDN facilities and NASCOM are managed by NASA's Goddard Space Flight Center, Greenbelt, Maryland.

The Goldstone DSN stations are operated and maintained by JPL with the assistance of the Philco-Ford Corporation. The Canberra stations are operated by the Australian Department of Supply. The stations near Madrid are operated by the Spanish government's Instituto Nacional de Tecnica Aerospacial.

LAUNCH OPPORTUNITY AND WINDOWS

The possible launch days or launch opportunities for Mariner 10 are determined by the need for proper relative geometry of Earth, Venus and Mercury. The period of time on each launch day when Mariner can be launched is determined by launch vehicle performance limits and tracking and telemetry requirements of the launch vehicle and spacecraft.

The opening day of the opportunity, November 3, has been selected to yield the greatest scientific data return from the spacecraft. From Nov. 3 until late November, Mariner can be launched using a one hour daily window. No launch will occur on Nov. 11 (GMT) because of poor scientific return. Because of the difference of five hours between GMT and EST, a launch opportunity is listed on Nov. 11 at 11:55 p.m. EST.

Launching to Mercury, an inner planet, means that the spacecraft must be slowed down in relation to the speed of the Earth as it orbits the Sun. For the first time, the gravity of another planet, Venus, is being used to assist in this process. The spacecraft will fly by the planet Venus in early February 1974 and arrive at Mercury in late March or early April 1974. On most launch days, the trajectory will allow a second Mercury encounter, two Mercury years (176 days) later.

The daily launch windows for Mariner 10 open at the following times and remain open for one hour.

Nov. 3	12:45 a.m. EST (45 minutes after midnight)
Nov. 4	12:39 a.m.
Nov. 5	12:34 a.m.
Nov. 6	12:30 a.m.
Nov. 7	12:26 a.m.
Nov. 8	12:18 a.m.
Nov. 9	12:14 a.m.
Nov. 10	12:08 a.m.
Nov. 11	11:55 p.m.
Nov. 12	11:48 p.m.
Nov. 13	11:43 p.m.
Nov. 14	11:38 p.m.
Nov. 15	11:33 p.m.
Nov. 16	11:26 p.m.

LAUNCH VEHICLE

Although Mariner Venus Mercury is the 24th operational launch for Atlas-Centaur, it is the first two-burn interplanetary mission for Centaur. In a two-burn mission, the engines on the Centaur upper stage are required to ignite and provide thrust twice in space.

This is also the second time that the uprated Atlas stage developing a total of approximately 431,000 pounds thrust will be used. This stage now becomes standard for Atlas-Centaur launches. Atlas stages have been continuously uprated over the years they have been used by NASA.

The rocket combination, standing approximately 39.9 meters (131 feet) high, consists of an Atlas SLV-3D booster and Centaur D-1A second stage. The Atlas booster develops 1,919 kilonewtons (431,000 pounds) of thrust at liftoff, using two 822,200 newton (185,000 pounds) thrust booster engines, one 268,100 newton (60,000 pound) thrust sustainer engine and two vernier engines developing 3,000 newtons (675 pounds) thrust each. The two RL-10 engines on Centaur produce a total of 131,000 newtons (30,000 pounds) thrust.

Centaur was the nation's first high energy, liquid hydrogen-liquid oxygen propelled launch vehicle. Developed and launched under the direction of NASA's Lewis Research Center, Cleveland, Ohio, it became operational in 1966 with the launch of Surveyor I, the U.S. spacecraft to soft land on the Moon's surface.

Up to the present time Centaur has been used in combination with the Atlas booster. However, beginning next year it will also be used in combination with the Titan III to boost heavier payloads into Earth orbit and onto interplanetary trajectories. One of Titan-Centaur's first jobs will be to launch the Viking spacecraft to Mars in 1975.

This will be the third launch of the Centaur D-1A which is a greatly modernized version of previous Centaurs. The modernization primarily consists of a new integrated electronic system controlled by a 60-pound digital computer. The new "astrionics" system performs a major role in checking itself and other vehicle systems prior to launch and also maintains control of major events after liftoff. The astrionics system is mounted on a new structure called an equipment module located on the nose of the Centaur stage.

The 16,000-word-capacity computer, which is the heart of the system, replaces the original 4,800-word-capacity computer and enables it to take over many of the functions previously handled by separate mechanical and electrical systems. The new Centaur system handles navigation, guidance tasks, propellant management, telemetry formats and transmission, and initiates vehicle events.

Many of the command and control functions previously performed by Atlas systems are now being handled by the Centaur equipment also. Systems which are totally integrated include guidance, flight control, telemetry and event sequence initiation.

One of the major advantages of the new Centaur D-1A system is the increased flexibility in planning new missions. In the past, hardware frequently had to be modified for each mission. Now most operational needs can be met by changing the computer software.

During 1973 Centaur successfully launched one Pioneer 11 to Jupiter and one Intelsat IV.

Launch Vehicle Characteristics

*Liftoff weight, including spacecraft	146,914 kilograms (323,866 lbs.)
Liftoff height:	39.9 meters (131 feet)
Launch Complex:	36B
Launch Azimuth:	90-105 degrees

	Atlas Booster	Centaur Stage
**Weight:	128,736 Kg (283,811 lbs.)	17,674 Kg (38,964 lbs.)
Height:	22.9 meters (75 feet) (including interstage adapter)	14.6 meters (48 feet) (with payload fairing)
Thrust:	1,919,300 newtons (431,000 lbs.) sea level	131,200 newtons 30,000 lbs.) vacuum
Propellants:	Liquid oxygen and RP-1	Liquid and liquid oxygen
Propulsion:	MA-5 system, [two 822,200-newton (185,000-lbs.)-thrust engines, one 268,100-newton (60,000-lb.)-sustainer engine and two 3,000-newton (675-lb.)-thrust vernier engines]	Two 65,600-newton 15,000-lb.)-thrust RL-10 engines. Fourteen small hydrogen peroxide thrusters
Velocity:	8940 kilometers per hour (5,454-mph) at BECO 13,444 km/hr (8,182 mph) at SECO	40,969 km/hr (25,456 mph) at MECO-2
Guidance:	Pre-programmed pitch rates through BECO Switch to Centaur inertial guidance for sustainer phase.	Inertial guidance

-more-

*Measured at 5.08 centimeters (two inches) of rise.
**Weights are based on AC-34 configuration.

Flight Sequence

Atlas Phase:

After liftoff, AC-34 will rise vertically for about 15 seconds before beginning its pitch program. Starting at two seconds after liftoff and continuing to T+15 seconds, the vehicle will roll to the desired flight azimuth.

After 138 seconds of flight, the booster engines are shut down (BECO) and jettisoned. BECO occurs when an acceleration of 5.7 g's is sensed by accelerometers on the Centaur and the signal is issued by the Centaur guidance system. The booster package is jettisoned 3.1 seconds after BECO. The Atlas sustainer engine continues to burn for approximately another minute and 53 seconds propelling the vehicle to an altitude of about 147 kilometers (92 miles), attaining a speed of 13,444 km/hr (8,353 mph).

Sustainer engine cutoff (SECO) occurs at propellant depletion. Centaur insulation panels are jettisoned prior to SECO.

The Atlas and Centaur stages are then separated. An explosive charge slices through the interstage adapter. Retrorockets mounted on the Atlas slow the spent stage.

At main engine cut-off, Centaur and its Mariner payload are in Earth orbit at an altitude of 188 kilometers (117 miles), moving at a speed of 26,522 kilometers per hour (16,480 mph). If launched at the beginning of the daily launch window, the Centaur main engines will be reignited after a coast of approximately 26 minutes. The second burn will last about two minutes and 12 seconds, speeding the vehicles up to 40,969 kilometers per hour (25,456 mph). Ninety-five seconds after shut down of the Centaur engines, the spacecraft separates.

Coast Period

Maneuvers required of Centaur on this Mariner flight are the most complex ever levied on the vehicle. The modernized D-1A Centaur has the ability for complex attitude control during coast and this ability is being used to keep various instruments aboard the Mariner spacecraft out of direct sunlight during coast and keep spacecraft antennas properly oriented toward tracking stations.

Retromaneuver

Following spacecraft separation, the Centaur again goes through reorientation so that when blow-down of the Centaur tanks begins a separation of more than 2,000 feet has been achieved. Blow-down consists of exhausting the remaining propellants in the Centaur tanks throught the main engines. At the same time, care must be taken to avoid impingement of exhaust gases on the spacecraft; the retromaneuvers must place the Centaur vehicle on a trajectory which will avoid impacting Venus. Centaur will finally go into a solar orbit.

Flight Events	Program Time	Earth Relative Velocity		Range		Altitude	
	Seconds	MPH	KM/HR	Statute Miles	Kilometers	Statute Miles	Kilometers
Liftoff	0	0	0	0	0	0	0
BECO	137.7	5,555	8940	49.4	79.6	35.2	56.7
Booster jettison	140.8	5,616	9038	53.8	86.6	37.2	59.8
Insulation panel jettison	182.7	6,373	10,257	118.3	190.6	60.5	97.4
SECO/VECO	253.5	8,353	13,444	255.2	411	91.7	147.6
Centaur separation	255.4	8,350	13,438	259.6	418.2	92.5	148.9
Centaur MEIG (1)	265.0	8,316	13,385	280.9	452.4	95.9	154.5
Nose fairing jettison	277.0	8,460	13,616	305.9	495.8	99.9	160.8
Centaur MECO (1)	577.6	16,480	26,522	1,264.9	2037	117.1	188.4
Centaur MEIG (2)	2148.0	16,525	26,595	8254	13,292.9	115.7	186.2
Centaur MECO (2)	2280.6	25,456	40,969	8978.9	14,459.9	131.4	211.5
Spacecraft separation	2375.6	25,255	40,644	9,617.3	15,488.1	206	331.4

LAUNCH OPERATIONS

The John F. Kennedy Space Center's Unmanned Launch Operations Directorate is responsible for the preparation and launch of unmanned space vehicles from the Cape Kennedy Air Force Station.

The Mariner 10 spacecraft was delivered to the Cape on August 11, 1973, and placed in Building AO's spacecraft check-out area for final verification tests.

In providing launch operations, KSC handles scheduling of test milestones and review of data to assure that the launch vehicle has met all of its test requirements and is ready for launch.

Atlas-Centaur 34 was erected on Complex 36's Pad B in July, 1973. The flight spacecraft was moved into the Explosive Safe Facility on September 25 for installation of ordnance and loading of hypergolic propellants. It was encapsulated and mated with its launch vehicle in mid-October.

The Flight Events Demonstration Test (FED) was conducted during the third week of October. The purpose of the FED is to assure that the space vehicle is electrically ready for final launch preparations. The FED includes running the computer and programmer through post flight events and monitoring the data to assure correct response to all signals with the umbilical ejected.

About 10 days before the planned launch, the spacecraft is mated with Atlas-Centaur and electrical tests are conducted.

The Composite Electrical Readiness Test (CERT) is scheduled for the overall space vehicle about 8 days prior to launch. The CERT verifies the ability of the launch vehicle to go through post-liftoff events. The range support elements participate along with the spacecraft and launch vehicle just as during a launch.

The T-1 Day Functional Test involves final preparations in getting the entire space vehicle ready for launch, preparing ground support equipment, completing readiness procedures and installing ordnance on the launch vehicle.

The countdown is picked up at T-600 minutes. All systems are checked against readiness procedures, establishing the integrity of the vehicle and ground support equipment interface prior to tower removal at T-120 minutes. Loading of cryogenic propellants (liquid oxygen and liquid hydrogen) begins at T-100 minutes, culminating in complete vehicle readiness at T-1 minute. The terminal count begins with monitoring all systems and topping off and venting propellant and purge systems. At T-10 seconds, the automatic release sequence is initiated and the space vehicle is clear for liftoff.

MISSION OPERATIONS SYSTEM

Mission Operations System (MOS) activities are centered in the Mission Control and Computing Center (MCCC) at JPL. MOS personnel of JPL, Boeing and the Phildo-Ford Corp. are responsible for establishing and maintaining the performance of the spacecraft and effecting the mission objectives.

The Mission Control and Computing Center is designed for 24-hour operation and is equipped to handle multiple spaceflight operations concurrently. The MCCC currently is shared by Mariner, Viking and Pioneer on a non-interference basis.

Detailed flight plans for each phase of the Mariner mission are developed by the Mission Sequence Working Group, which contains representatives of the Spacecraft, Science, Navigation, Deep Space Network, Mission Analysis and Data Processing teams.

Together with the Tracking and Data System, the MOS utilizes the ground data system (tracking, telemetry and command functions) to carry out the mission.

The MOS includes the personnel, software, hardward, organization and procedures unique to the Mariner project. Nearly all elements of the MOS are supported by special-purpose computer programs which simplify planning and analysis of mission sequences.

Telemetry

Incoming data to the MCCC on high-speed and wideband data lines are processed by the Mission and Test Computer (MTC). Information is presented to flight controllers in real time via character printers, line printers and video displays. TV pictures, for example, are displayed on monitors via scan converters. A limited amount of image enhancement of each TV frame can be performed in real time, allowing analysts to quickly examine good quality pictures of Venus or Mercury.

Commanding the Spacecraft

Commands to the spacecraft for directing or modifying the sequence are developed in the MCCC by the appropriate team or teams and fed to the command generation program (COMGEN). COMGEN generates the coded commands needed to program the spacecraft.

For example, TV pictures pointing requests are fed to a planetary geometry program which generates the desired look angles. These angles are converted to spacecraft actuator angles by a program which models Mariner's scan platform and are input to COMGEN. COMGEN inserts the refined data values into coded commands to the spacecraft articulation and pointing subsystem (APS). Within COMGEN are simulators for a number of spacecraft subsystems--APS, central computer and sequencer, flight data subsystem and tape recorder. The simulators act upon the generated command series in time order and produce a composite prediction of spacecraft performance. These printed predictions are used by flight controllers to monitor the spacecraft as it actually responds to the transmitted command series.

Total mission operations manpower is about 120 persons. Most sequences are scheduled for prime shifts, normally synchronized with the view period of the Goldstone stations of the Deep Space Network. Round-the-clock heavy activity periods include launch, Earth-Moon TV coverage, Venus and Mercury encounters and trajectory correction maneuvers.

IMAGE PROCESSING LABORATORY

Non-realtime refinements to the video data from Venus and Mercury will be performed by JPL's Image Processing Laboratory (IPL), a pioneer in the field of computer enhancement techniques.

The IPL processing, which results in final TV products for use in scientific analysis and map construction, involves decalibration of known camera distortions and other complex computer enhancements.

MARINER VENUS/MERCURY 1973 SCIENCE INVESTIGATORS

Television Experiment

Team Leader: Bruce C. Murray
California Institute of Technology

Team Members:
Michael J. S. Belton
Kitt Peak National Observatory
G. Edward Danielson Jr.
Jet Propulsion Laboratory
Merton E. Davies
Rand Corporation
Bruce Hapke
University of Pittsburgh
Brian T. O'Leary
Hampshire College
Robert Strom
University of Arizona
Verner E. Suomi
University of Wisconsin
Newell J. Trask
U. S. Geological Survey

Associate Team Members:
James L. Anderson
California Institute of Technology
A. Dollfus
Observatoire de Paris
Donald E. Gault
NASA Ames Research Center
John Guest
University of London Observatory
Robert Krauss
University of Wisconsin
Gerard P. Kuiper
University of Arizona

Plasma Science Experiment

Principal Investigator: Herbert S. Bridge
Massachusetts Institute of Technology

Co-Investigators:
J. Ashbridge
Samuel J. Bame
M. Montgomery
Los Alamos Scientific Laboratory

A. Hundhausen
University of Colorado

-more-

Leonard Burlaga
R. E. Hartle
Keith W. Ogilvie
NASA Goddard Space Flight Center

J. H. Binsack
A. J. Lazarus
S. Olbert
Massachusetts Institute of Technology

Clayne M. Yeates
Jet Propulsion Laboratory

George L. Siscoe
University of California
at Los Angeles

Ultraviolet Spectroscopy

Principal Investigator: A. Lyle Broadfoot
Kitt Peak National Observatory

Co-Investigators: M. B. McElroy
Harvard University
Michael J. S. Belton
Kitt Peak National Observatory

Infrared Radiometry

Principal Investigator: Stillman C. Chase Jr.
Santa Barbara Research Center

Co-Investigators: Ellis D. Miner
Jet Propulsion Laboratory
David Morrison
University of Hawaii
Gerry Neugebauer
California Institute of Technology

Charged Particles Experiment

Principal Investigator: John A. Simpson
University of Chicago

Co-Investigator: J. E. Lamport
University of Chicago

MARINER VENUS-MERCURY "73 TEAM

Office of Space Science

Dr. John E. Naugle	Associate Administrator, OSS
Vincent L. Johnson	Deputy Associate Administrator, OSS
Robert S. Kraemer	Director, Planetary Programs
Dr. S. Ichtiaque Rasool	Deputy Director, Planetary Programs
N. William Cunningham	Program Manager
Gunther Strobel	Program Engineer
Stephen E. Dwornik	Program Scientist
Joseph B. Mahon	Director, Launch Vehicle Programs
T. Bland Norris	Manager, Medium Launch Vehicles
F. Robert Schmidt	Manager, Atlas-Centaur

Office of Tracking and Data Acquisition

Gerald M. Truszynski	Associate Administrator for OTDA
Arnold C. Belcher	Network Operations
Maurice E. Binkley	Network Support

Jet Propulsion Laboratory, Pasadena, CA

Dr. William H. Pickering	Laboratory Director
Gen. Charles H. Terhune Jr.	Deputy Laboratory Director
Robert J. Parks	Assistant Laboratory Director for Flight Projects
Walker E. Giberson	Project Manager
John R. Casani	Spacecraft System Manager
James N. Wilson	Assistant Spacecraft System Manager
Norri Sirri	Mission Operations System Manager
Victor C. Clarke Jr.	Mission Analysis and Engineering Manager

Radio Science Experiment

Team Leader:	H. T. Howard Stanford University
Team Members:	Irwin I. Shapiro Massachusetts Institute of Technology John D. Anderson Gunnar Fjeldbo Arvydas J. Kliore Gerald S. Levy Jet Propulsion Laboratory
Associate Team Members:	G. Tyler Stanford University R. D. Reasenberg Massachusetts Institute of Technology D. Lee Brunn Richard Dickinson Robert E. Edelson Charles T. Stelzried Jet Propulsion Laboratory

Magnetic Fields

Principal Investigator:	Norman F. Ness NASA Goddard Space Flight Center
Co-Investigators:	Kenneth W. Behannon Ronald P. Lepping Clell S. Scearce Kenneth H. Schatten J. Scheifele NASA Goddard Space Flight Center Y. C. Whang Catholic University

-more-

Dr. James A. Dunne	Project Scientist
Dr. Clayne M. Yeates	Assistant Project Scientist
Dr. Nicholas A. Renzetti	Tracking and Data System Manager
Esker K. Davis	Deep Space Network Manager
Gael F. Squibb	Chief of Mission Operations

Lewis Research Center, Cleveland, O.

Bruce T. Lundin	Director
Edmund R. Jonash	Director, Launch Vehicles Division
W.R. Dunbar	Deputy Director, Launch Vehicles
Daniel J. Shramo	Atlas-Centaur Project Manager
Rodney M. Knight	Mariner Venus Mercury Project Engineer

Kennedy Space Center, Florida

Dr. Kurt H. Debus	Center Director
John J. Neilon	Director, Unmanned Launch Operations (ULO)
John D. Gossett	Chief, Centaur Operations Branch, ULO
Donald C. Sheppard	Chief, Spacecraft Operations Division, ULO
James E. Weir	Spacecraft Operations Engineer

Boeing Company, Kent, Washington

Dr. Haim Kennet	Project Manager

MARINER VENUS/MERCURY '73 SUBCONTRACTORS

Following is a list of some key subcontractors who provided instruments, hardware and services for the Mariner/Venus-Mercury '73 Project:

The Boeing Company Kent, WA	Spacecraft System and Support
Spacecraft Engineering Hardware	
Honeywell Radiation Center Lexington, MA	Celestial Sensors
Lockheed Electronics Co. Plainfield, NJ	Data Storage Tape Transport
Motorola, Inc., Government Electronics Division Scottsdale, AZ	Radio Frequency Sub-Flight Data Subsystem
Texas Instruments Equipment Group Dallas, TX	Data Storage Subsystem; Command Unit; Telemetry Modulation Unit
Xeros Corp., Electro Optical Systems Pasadena, CA	Power Subsystem
TRW Systems Group Redondo Beach, CA	Flight Batteries
Sterer Engineering and Manufacturing Co. Los Angeles, CA	Reaction Control Jet Nozzle Assemblies
General Electric Space Division Valley Forge, PA	Electronic Parts Screening
Centralab, Semi Conductor Div. El Monte, CA	Solar Cells
Innovative Electronics Monrovia, CA	Printed Circuit Boards
Optical Coating Laboratory Inc. Santa Rosa, CA	Solar Cell Glass Cover Filters
Watkins-Johnson Palo Alto, CA	TWT Amplifiers

-more-

Science Instruments

Santa Barbara Research Center Goleta, CA	Infrared Radiometer
Kitt Peak National Observatory Tucson, AZ	Ultraviolet Spectrometer
Xeros Corp, Electro-Optical Pasadena, CA	Television
Massachusetts Institute of Technology Cambridge, MA	Plasma Science
University of Chicago Chicago, IL	Charged Particle Telescope
Goddard Space Flight Center Greenbelt, MD	Magnetometers

CONVERSION TABLE

Multiply	By	To Get
Inches	2.5400	Centimeters
Centimeters	0.3937	Inches
Feet	30.4800	Centimeters
Centimeters	4.7244	Feet
Feet	0.3048	Meters
Meters	3.2808	Feet
Yards	0.9144	Meters
Meters	1.0936	Yards
Statute Miles	1.6093	Kilometers
Kilometers	0.6214	Miles
Feet Per Second	0.3048	Meters Per Second
Meters/Second	3.281	Feet/Second
Meters/Second	2.237	Statute Miles/Hour
Feet/Second	0.6818	Miles/Hour
Miles/Hour	1.6093	Kilometers/Hour
Kilometers/Hour	0.6214	Miles/Hour
Pounds	2.2046	Kilograms
Kilograms	0.4563	Pounds

To convert Fahrenheit to Centigrade, subtract 32 and multiply by 5/9.

To convert Centigrade to Fahrenheit, multiply by 9/5 and add 32.